Argonne NATIONAL LABORATORY

ANL-HEP-TR-12-37

Notes on Polarization Rotation in Fibers

High Energy Physics Division

About Argonne National Laboratory

Argonne is a U.S. Department of Energy laboratory managed by UChicago Argonne, LLC under contract DE-ACO2-06CH11357. The Laboratory's main facility is outside Chicago, at 9700 South Cass Avenue, Argonne, Illinois 60439. For information about Argonne and its pioneering science and technology programs, see www.anl.gov.

Availability of This Report

This report is available, at no cost, at http://www.osti.gov/bridge. It is also available on paper to the U.S. Department of Energy and its contractors, for a processing fee, from:

U.S. Department of Energy
Office of Scientific and Technical Information
P.O. Box 62
Oak Ridge, TN 37831-0062
phone (865) 576-8401
fax (865) 576-5728
reports@adonis.osti.gov

Disclaimer

This report was prepared as an account of work sponsored by an agency of the United States Government. Neither the United States Government nor any agency thereof, nor UChicago Argonne, LLC, nor any of their employees or officers, makes any warranty, express or implied, or assumes any legal liability or responsibility for the accuracy, completeness, or usefulness of any information, apparatus, product, or process disclosed, or represents that its use would not infringe privately owned rights. Reference herein to any specific commercial product, process, or service by trade name, trademark, manufacturer, or otherwise, does not necessarily constitute or imply its endorsement, recommendation, or favoring by the United States Government or any agency thereof. The views and opinions of document authors expressed herein do not necessarily state or reflect those of the United States Government or any agency thereof, Argonne National Laboratory, or UChicago Argonne, LLC.

ANL-HEP-TR-12-37

Notes on Polarization Rotation in Fibers

by
D. Underwood
High Energy Physics, Argonne National Laboratory

December 4, 2012

Notes on Polarization Rotation in Fibers

As of Dec. 4, 2012
Continuously updated

D. Underwood
HEP, Argonne

ABSTRACT

Polarization rotation and bi-refringence in simple single mode optical fibers are potentially very problematic for the use of CW lasers outside HEP experiments feeding light modulators in the experiments for data collection. Most of the proposed modulators work with one polarization. There are theoretical papers on the possible rotation and bi-refringence in SM fibers. Polarization maintaining fibers are prohibitively expensive for this application, While we know experimentally that the polarization can be rotated by up to 90 degrees in a long SM fiber, resulting in extinction, this may be compensated and the other effects may be managable. We propose simple methods to investigate the effects, and simple methods to rotate the polarization to compensate rotation in a fiber. We also consider a case of one fiber from a laser to a splitter near the remote modulators. We also consider deliberately depolarizing the source light.
It seems likely that one can obtain adequate performance of modulators which utilize one polarization with the use of a polarization rotator only at the remote laser source.

Work supported by the U. S. Department of Energy, Office of Science, Office of High Energy Physics under contract no. DE-AC02-06CH11357.

INTRODUCTION

The use of light modulators for the optical links in large HEP experiments would address many current issues, such as reliability, power use, size and mass, and radiation hardness of the overall system. At high levels of radiation, the laser could be susceptible, and it has been proposed to move the CW laser outside the detector to an area of low radiation, and bring light in to the modulators on a fiber. The light could be split to feed many modulators.

A serious issue with this approach is that if the light is polarized at the source, e.g. the laser, or before any long fiber route, e.g. in a splitter, the polarization can be rotated by torsion, bending, or compression in the fiber. The resulting polarization could in general be a mismatch to the polarization direction needed in the modulator. We have in fact observed this effect when using a polarized laser with a long, coiled, conventional singlemode fiber and a Mach-Zhender modulator. Polarization could be rotated by 90 degrees, resulting in extremely low power output.

If unpolarized light were used, and the light stayed unpolarized throughout the delivery system, one would have a factor of two power loss at the modulators, but the system would be stable and usable. However, we can't assume this. The lasers we use at 1550 nm are typically polarized. We discuss the problematic nature of unpolarized light later in this paper.

We typically want to use cables of single mode (SM) fiber rather than multimode fiber (MM) for reasons of cost, radiation hardness, and link margin due to two kinds of dispersion, and they may have other advantages also. Polarization maintaining fibers are roughly a factor of 5 higher in cost compared to simple SM fibers, and typically not in the same cable form as simple SM fibers. [PM fiber]

The effect of fiber on a linear polarization direction can be potentially serious, with polarization rotation, birefringence, generation of helical polarization, etc. There is a paper which analyzes the possible effects. [Theory] *Transmission of linearly polarized light through a single-mode fiber with random fluctuations of birefringence*

http://www.ipr.umd.edu/Optical/Publications/pub99-2.pdf

The paper basically says that for a given fiber situation, there is one input angle with will give linear polarization at the output. You don't know ahead of time what the input angle is, and the output angle is also rotated by an angle with respect to the input angle and you can't know this beforehand either. Any other angles give elliptical polarization. Elliptical polarization means that there is an orthogonal polarization component with some phase. (We can take this as orthogonal to the largest pol. component, whatever that is.)

However, there is nothing said about the magnitude of this extra component in circular or elliptical polarization, and even if it were equal to the main component, there would be only a factor of root(2) in amplitude and a factor of 2 loss in power, assuming that one compensated for overall rotation. What we have found at Argonne HEP is that with 20 meters of fiber piled on a table, one could twist the fiber to get good operation of the modulator. This encourages us to look for a simple rotation solution.

The most comprehensive paper we have found on the whole issue of polarization control in fibers is [Walker and Walker] Polarization Control for Coherent Communications, Nigel G. Walker and Graham R. Walker, Journal of Lightwave Technology Vol.8, No.3, 1990
http://ieeexplore.ieee.org/iel1/50/1855/00050740.pdf?arnumber=50740
In their 1990 paper, Walker and Walker describe the previous efforts, the new understanding of how to provide continuous control when controllers reach their mechanical or electrical limits, and descriptions using the Poincare' Sphere. They describe controllers based on using stressed fiber, coiled fiber, LiNO3 crystals, etc. While this is a very comprehensive treatment, it should be that little of it is required for our application: 1) The applications discussed are all at the receiver end of a fiber, not the transmission end. (We will have access to the source end of the fiber, and perhaps a simple power feedback loop.) 2) The applications are for coherent optical hetrodyning receivers which have requirements on phase from two sources, not like the requirements of simple modulators which have one spource. 3) They are discussing undersea fiber runs of more than 100 km, and WDM data transmission which may not be relevant to us if we have an absolute minimum of hardware on-detector.

The theoretical analysis of different systems seems to imply that for adjustments where a break in communication is allowable occasionally, the system of three wound fibers configured as ¼ or 1/3 wave plates is optimal and simple.
[Paddle] http://www.thorlabs.com/NewGroupPage9.cfm?ObjectGroup_ID=343
There is also extensive discussion of which configurations require accurate calibration and which do not.

There is an inline rotating fiber union which has less than 0.25 db ripple as a fiber is rotated. [Rotary Joint] http://www.princetel.com/product_forj.asp The advantage of this system is that one can read off the angle of rotation, which is highly non-trivial with the paddle rotators.

There is a note by Newport company [Newport analysis]
http://assets.newport.com/webDocuments-EN/images/12143.PDF
describing what is basically our problem with long fibers, and what they propose as an economical way to make adjustments and measurements. They have a polarization rotation device which uses pressure on fiber, and they go through the formulas for the rotation and have diagrams of test setups.

Basically what we would like to investigate is whether a system based on rotating the polarization before the long fiber, instead of after as in figure 5, TOP, of this Newport note, is adequate for the real world use.

There is another paper with references to studies such as we propose, and an experimental test of a solution. [Coiled Fiber Faraday]

http://ieeexplore.ieee.org/xpl/articleDetails.jsp?reload=true&arnumber=477272&contentType=Journals+%26+Magazines
This paper claims that adjustments might need to be made at up to 10 Hz in some systems. It claims that the polarization rotator such as that in the Newport note would suffer from fatigue after a large numbers of cycles. The device they describe is a double Faraday rotator which used the low Verdet constant of the fiber itself, enhanced by twisting the fiber to get non-linear birefringence. They utilize coils of hundreds of turns of fiber with toroidal wire winding around them. Again, it is not obvious how the systems they test are related to our simpler needs.

There is a nice picture of possible effects mixing circular and linear polarization in general in some class notes [Class Notes] We have modified the formulas, adding another angle to represent the input polarization angle with respect to all other elements. We have made plots for several cases. See Appendix III for our plots. We could do a more extensive treatment by using the Poincare' sphere explicitly, but including the phase as well as the angles is a simple way to the useful result, in particular in our case of having linearly polarized light with no birefringence coming from the laser.

There is also a paper on experimental measurements of polarization rotations in fibers, [Experimental] http://www.tandfonline.com/doi/abs/10.1080/01468030903377208#preview but it is focused on Polarization Maintaining Fibers, and we have not been able to read all of the paper.

There is also a study of how polarization becomes randomized or rotated by pressure on the fiber [Pressure] http://www.chiralphotonics.com/Web/polarizer.html Note that the graph is log(load) not load.

There are commercial tunable polarization rotation devices which depend exclusively on coils of the kind of SM fiber which is used for data transmission. [Paddle]
http://www.thorlabs.com/NewGroupPage9.cfm?ObjectGroup_ID=343
While the point here is that the effects in fibers are large and troublesome, we could utilize this device. In fact in Walker and Walker it is claimed to be a ubiquitous solution. We could motorize this device fairly simply by making rings out of 5 or 6 inch aluminum pipe, and gluing on pieces of self-meshing timing belt to make pulleys to couple to servo motors, or by using linkages in the case of less than 180 degree rotation.

There is also a commercial polarization rotator which depends on pressure on the fiber to do the rotation. It is an issue that one cannot know the angle which is set in a simple way or a way which is reproducible over a long time. [Newport pressure]
http://search.newport.com/?q=*&x2=sku&q2=F-POL-PT-FCUPC
While the point here is that the effect is very large and worrisome, it can also be utilized for corrections. In some papers it is claimed that this will wear out after some large number of cycles if motorized.

The other approach to think about may be to simply depolarize the light before sending it into the fiber. The LiNO3 Mach-Zhender modulators have an internal polarizer before the modulator. It may be that most modulators either will have this filter, or will use square or rectangular Silicon Integrated Optics waveguides which couple one polarization to the modulator or have Holographic lenses which capture only one polarization. [Hotchips_Holo]
http://www.hotchips.org/wp-content/uploads/hc_archives/hc21/2_mon/HC21.24.200.I-O-Epub/HC21.24.220.Kucharski-Luxtera-40Gbps-CMOS-Optical-Transceiver.pdfIn
these cases, one would simply lose half the light at the modulator and if no actual polarization of the unpolarized light occurred in the fiber run, the system would be stable. An additional advantage of this approach would be that polarization maintaining splitters from a feed fiber to

many modulators would not be needed. There are commercially available inline fiber depolarizers [Depol]
http://www.phoenixphotonics.com/website/products/fiber%20optic%20depolarizers.htm

However, we have to ask, what is polarized light from a laser? If two beams of orthogonal polarization and infinite coherence length are combined, one gets polarization at 45 degrees, not an unpolarized beam. There is an intimate connection between what we call "unpolarized" and coherence length. During a coherence time, the light is polarized. Unpolarized means that the light comes out in little polarized bursts of coherence time in length.

To quote wiki "Light also has a polarization, which is the direction in which the electric field oscillates. Unpolarized light is composed of incoherent light waves with random polarization angles. The electric field of the unpolarized light wanders in every direction and changes in phase over the coherence time of the two light waves. An absorbing polarizer rotated to any angle will always transmit half the incident intensity when averaged over time. N.B. Averaged over Time. If the electric field wanders by a smaller amount the light will be partially polarized so that at some angle, the polarizer will transmit more than half the intensity. If a wave is combined with an orthogonally polarized copy of itself delayed by less than the coherence time, partially polarized light is created.

There is a table of coherence lengths for various kinds of lasers in [Coherence]
http://www.iet.ntnu.no/Courses/tfe4160/Notater/Polarization,%20coherence,%20interference%20and%20lasers.pdf We might have to think about this in relation to the length of time the laser represents a 1 or 0 (or time between transitions) in data transmission. If the polarization were to fluctuate differently for each bit, there might be errors.

There is a disease of optical data transmission fibers called PMD. This is polarization mode dispersion. The effect is due to the two orthogonal polarizations propagating at different velocities in the fiber, so that e.g. bits could overlap. The units are pico-seconds per sqrt(kilometer length) based on modeling as random effects in the fiber.
[PMD]www.corning.com/WorkArea/downloadasset.aspx?id=7827
This does not seem to be a major problem for data rates less than 40 Gb/s and fiber lengths less than 1 KM.

THINGS TO TRY

What we would really like to accomplish is to find a method to deal with polarization rotation and birefringence with minimal cost and minimal technology in real HEP detector environments. We can consider a few possible paths which might work.

We can try a couple of sets of assumptions

A) The remote modulators are installed on fibers with random orientation during installation and cannot be changed. Only the input to the fiber can be changed.
B) The remote modulators might be crudely matched to the installed fibers at initial installation, the then one would hope for only small corrections later in time. This would presumably involve scanning both the input and output orientations, with some electronic connection to DAQ during the scan.

One area of concern is that we will send light in on one fiber, then split it for use in multiple modulators. If the splitter does not preserve polarization (or the output connectors are installed at random angles) then we also need a simple way to deal with this.

Consider trying:

1) If we need splitters in the experiments, test various kinds of splitters – ordinary directional couplers, holographic splitters, etc, to see what happens to the polarization. We have purchased 1->2 splitters and 1->4 splitters to perform this test.
2) Find some inexpensive hardware which will allow us to set the initial polarization direction of each channel to the optimum for distant modulators, and then make small adjustments later by rotating the laser with the fiber still attached to the laser. For example, one might use something like FC connectors with no key, set the directions by hand, and tighten the connectors. This may be a compromise if one feed fiber is split near many modulators. We have ordered the Three Paddle polarization rotator as a way to get started while investigation rotating unions, etc.
3) Find existing setups in HEP experiments which we can test. For example fibers in CDF or D0, or try working with CMS fibers during an upgrade when they are not in use. We have a private communication that these are available in D0 and CDF. Additionally, one can run some cables and single fibers in cable trays with other electrical cables to make a realistic simulation. Unfortunately D0 used Multi-Mode fibers, and CDF cut off the ends of SM fibers at the end of a cable tray to the counting house so that it is unlikely that anything can be recovered by splicing connectors.
4) Investigate whether one can make small corrections by rotating the laser with the fibers attached. The fibers could twist over a couple of meters and we could see if this is effective and if it is stable.
5) Although we will probably never want to source light through multi-fiber cables, e.g. of of 8 or 12 fibers with MPO connectors, we can do our bench tests to see if all the fibers behave in the same way.

Some further considerations- Chips like the Luxtera have a holographic lens which captures light at right angles to the chip and feeds light into silicon waveguides. Gunn invented this and there is a picture in a conference proceeding].[Gunn Holo] The light in the square or rectangular waveguide either only has one polarization captured, or captures both in different orientations. Either way, only the main polarization is used by the modulators.

An optimizing feedback loop might sample part of the output of the modulator in a slow pin diode, and one could optimize the rotation of the laser to maximize this.

The optimization might have to be done once a day early on, then once a week, then once a month, etc as the fiber settles into a particular twist.

PROPOSED EXPERIMENTS

We propose ways to rotate the input polarization, and analyze the output polarization in order to investigate the typical size of effects in 100M to 200M of fiber with arbitrary path and torsion typical of routed fibers in a HEP experiment. We also would repeat the input scans for rotated output polarizer to find an optimum, and compare this to the simpler random end case.

There are several ways to rotate the input polarization.

The theoretical analysis of different systems in [Walker and Walker] implies that for adjustments where a break in communication is allowable occasionally, the inline fiber rotator system of three wound fibers configured as ¼ or 1/3 wave plates is optimal and simple.
[Paddle] http://www.thorlabs.com/NewGroupPage9.cfm?ObjectGroup_ID=343
There is a commercial device for 1550 nm (and for 1490 nm) [Rotating Source] http://www.ozoptics.com/ALLNEW_PDF/DTS0073%20NEW2%20Polarized%20Fiber%20Optic%20Source..pdf In this second method, one rotates the laser, and uses a fiber optic rotary coupler to avoid changing the torsion on the long run of fiber. The rotation could be done with simple and cheap servo motors such as used in model airplanes, and the rotational couplers are commercially available. [Rotating Joint] from e.g. Princetel. The couplers have 2 or 3 db insertion loss, and very small, e.g. 0.25 db change with rotation. The third method is to use an in-line fiber polarization rotator based on pressure between the laser and the long fiber run. These are commercially available.[inline P rotator]. These rotators work by squeezing a special fiber with manual adjustment. We are considering another scheme with electrically rotatable polarization control through Faraday rotation, but have not found a commercial part. This might not be difficult in principle, since the Faraday effect is linear in magnetic field, and one could have electromagnets in place of the Samarium-Cobalt magnets usually employed, however a 0.1 T magnet with 10 cm long by 1 cm bore would require about 10^4 ampere-turns and run about 100 Watts. See Appendix 1 on Faraday.

An experiment – described with a rotating union, but applicable in general- get a polarized laser with either rotating coupler or the connector key ground off, and a receiver made of pin diode with a polarizing filter and a plain single mode fiber about 100 to 200 M long. For each stepped position of the fiber rotation angle at the receiver, allow rotation of the laser. Try rotating the laser to maximize output. Twist the fiber to another configuration, and try again. Try many examples, and make a table of the maximum and minimum of the optimized values.

If we lack a rotating fiber union, we might have to grind off a key in a fiber connector in order to do this test. This simple test is shown in figure 1. We could also do it in a more reproducible way with the paddle rotator, and the paddle could be automated for automated scans to find optima.
To try to keep track of other polarizations which come along with what we see as the dominant one, we could measure total intensity and relative intensity vs polarization angle for very short fibers and compare to very long fibers.

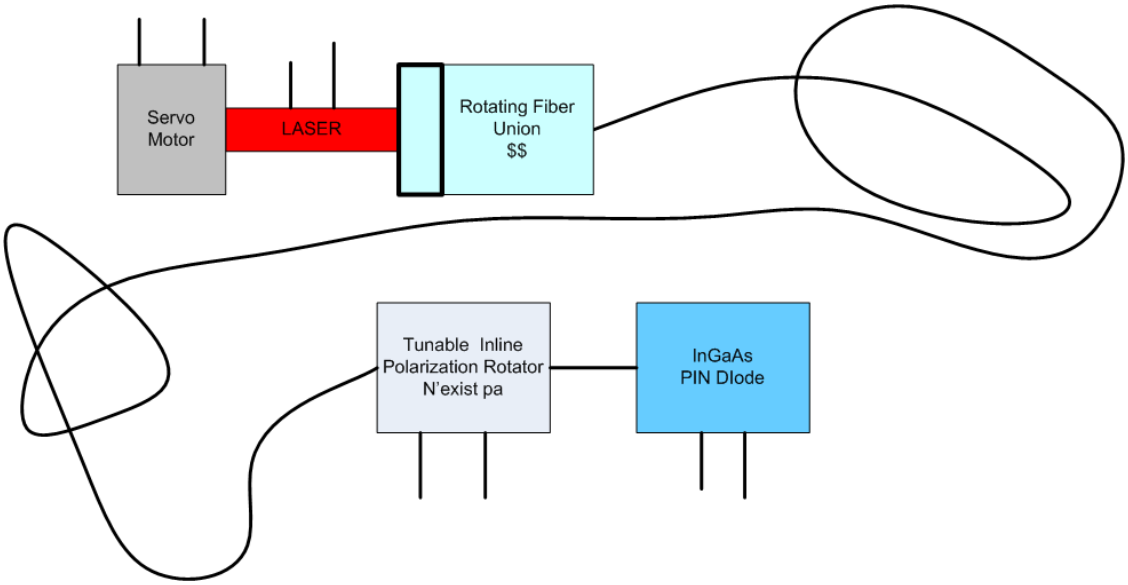

Figure 1. An ideal, but probably unrealizable test setup utilizing a rotating fiber union. The servo motor can rotate the laser by more than 180 degrees. The inline polarization rotator would be an analyzer, also run by computer. A test system could step the servo motor over a range of more than 180 degrees, and record the PIN diode output for each step of the analyzer angle. An electronically tunable inline fiber rotator does not seem to be available commercially, and the three-coil inline fiber rotators are considerably less expensive than a rotating union

If we want to motorize anything, unions or coil rotators or perhaps analyzers, there are small interface boards and software available to utilize model airplane servo motors with computer input for science experiments and robotics. [Pololu] http://www.pololu.com/catalog/category/12

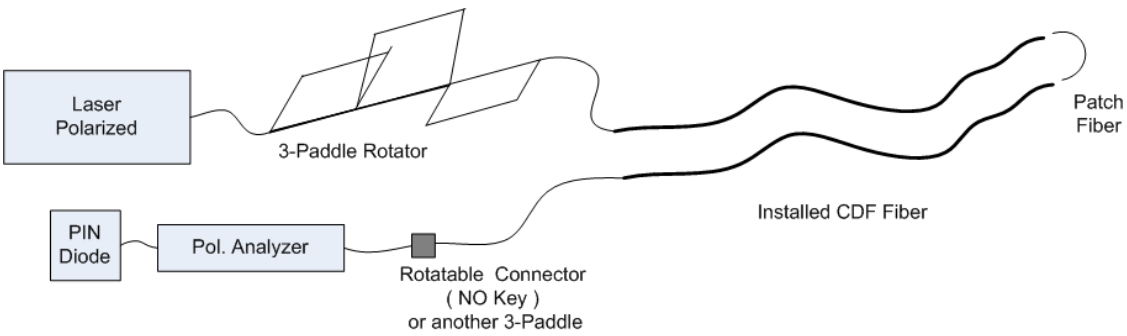

Figure 2. A possible way to examine the polarization rotation effects in installed Single Mode fibers. There is an issue with rotating the analyzer, in that a connector with the key ground off is not ideal for many connect-disconnect measurements, and the alternative 3-Paddle has completely uncalibrated rotation of Polarization. One might use a polarizer in air after a lens on the fiber, and before the PIN diode. The polarizer material would have to work at 1550 nm.

The point of the data analysis will be to

1) Separate the attenuation in a long fiber from the apparent loss due to polarization effects. This will be done basically be measuring the attenuation in short and long fibers with no analyzing polarizer.
2) Find whether the polarization effects can be essentially eliminated by rotating the polarization a) for arbitrary polarization analyzer at the end, and b) with the end polarizer roughly optimized.
3) See if small corrections can be made after an initial setup by rotating the laser with the fiber attached by a small angle, and if the corrections are still small over time.

Equipment needed
Inline fiber polarizers are available from many companies e.g. from Thorlabs. Some have single mode non-polariation preserving fiber on the input, and Polarization maintaining fiber on the output. The cheaper ones have no connectors, and we don't have any way to put connectors on single mode fibers. None of these are rotatable.
Three coil polarization rotators are less expensive than other rotators.

For our purposes, we would need rotator output with FC connector on the end so that we could test ordinary fibers.

We need various comparative tests to understand a system:

1) Test by putting polarized light into a very short fiber and measuring how much gets through a modulator, and a fake modulator made with polarizer and PIN diode.
2) Test by using a polarized laser and compare received power after a long twisted and bent fiber with no polarizer at the far end to the result with the inline fiber polarizer (at various angles) at the end before a photodiode.

Possible Analysis and Possible Conclusions

We would like to ask what are the likely outcomes of our study, and what would the implications be for sending light to modulators in various scenarios. The most likely outcome is that a simple rotator at the source can always correct the output of the fiber at a given polarization to restore intensity in that polarization within a factor of two. One can do much better with a rotator on both ends, but this seems unlikely to be implemented in the environment of a HEP experiment. Assume the worst case, which is a slow factor of 2 variation of light in the useful polarization at the modulator. This is probably really slow, because the short term (minutes, weeks…) corrections are mostly to the angle, and the phase might vary much more slowly. See Appendix III. Then if a modulator only had an extinction ratio of 3.5 db, (factor 2.24) one would have to continuously adjust the baseline of the receiver which was getting the data of the modulated light as corrections to the laser fiber were made. This seems eminently doable, and now happens automatically in most systems, e.g. AGC in SFP modules. Of course, some modulators have much higher extinction ratios such as 10db or 20db.

The hardware required in experiments to make all this work would probably be relatively simple. Some kind of electrically driven polarization rotator at the Laser would be in a slow and simple feedback loop, with light intensity sensor either at the output of the modulator or at the actual data receiver.

APPENDIX 1 Faraday EFFECT

From Wikipedia: [Faraday] http://en.wikipedia.org/wiki/Faraday_effect

"The Faraday effect causes left and right circularly polarized waves to propagate at slightly different speeds, a property known as circular birefringence. Since a linear polarization can be decomposed into the superposition of two equal-amplitude circularly polarized components of opposite handedness and different phase, the effect of a relative phase shift, induced by the Faraday effect, is to rotate the orientation of a wave's linear polarization.

The Faraday effect has a few applications in measuring instruments. For instance, the Faraday effect has been used to measure optical rotatory power and for remote sensing of magnetic fields. The Faraday effect is used in spintronics research to study the polarization of electron spins in semiconductors. Faraday rotators can be used for amplitude modulation of light, and are the basis of optical isolators and optical circulators; such components are required in optical telecommunications and other laser applications.[

There is a good description of how an optical isolator works in [Faraday Optical Isolator] http://www.dmphotonics.com/Faradays_QA.htm

APPENDIX II YIG Faraday ROTATORS

One might think of adding an electromagnet to a commercial 45 degree Faraday rotator isolator to make a programmable polarization rotator. This turns out to not be practical for rotations of more than a few degrees. The properties of YIG material, which is used as a Faraday rotator for 1550 nm are described in Reference [Isowave YIG] http://www.isowave.com/pdf/materials/Yttrium_Iron_Garnet.pdf.
The main issue is that the material saturates at some field, and the devices run in saturation mode. At saturation field of 1780 gauss, one gets 21 deg rot/mm and the crystals are 2.1 mm long to get 45 deg. Of rotation. They are only linear up to about half of saturation. Calculations for getting 1 KG in a small solenoid for DC operation with copper wire is shown in Table 1 below. However, one would need about 20 mm of YIG crystal, and we do not have a way to interface the fibers to such a crystal. Perhaps 6 of the isolators could be modified to work in series to get more than +- 45 deg rotation just for the tests. One can buy many pieces of a similar raw material (FLL or FLG, cut for saturation at 45 degrees) from http://www.IntegratedPhotonics.com
Again, we have no easy way to interface fibers to the material.

calculations for 1 KG (0.1T) solenoid 10 cm (4 in) long with 1 cm dia hole

wire guage	wire dia	I amps	ohms / K Ft	turns	winding area	radius R max	avg Ln /Turn	wire Ln in	R Ohms	Powr I2R watt	Volt
"0000"	0.46	320	0.049	32	6.771	1.99	6.26	200.2	0.0008	83.73	0.262
2	0.257	100	0.156	100	6.604	1.95	6.13	612.7	0.008	79.65	0.796
7	0.144	32	0.498	320	6.635	1.96	6.15	1968.	0.0817	83.64	2.614
12	0.081	10	1.6	1000	6.561	1.94	6.09	6092.	0.8123	81.23	8.123

APPENDIX III Simulation of rotated, birefringent fiber

We have a very simple simulation, based on the following assumptions:

1) The optimum angle of introducing polarized light into a long fiber is unknown because
   a) there are rotations due to stress
   b) the two ends of the fiber cannot be seen when the connectors are installed.
2) There is either a polarizer at the modulator at the end of the fiber, or only one polarization is captured. [Hotchips Holo]
3) The long fiber has both polarization rotation and birefringence which can be lumped as occurring in one place (Justified by matrix multiplication in reference [Theory].)

The treatment given in the class notes by Dodds at Rice [Class] is particularly useful in this context because the amount of birefringence is a free parameter, not fixed for a ¼ wave plate as in other treatments. We add another overall rotation to the treatment to evaluate the rotation of the input polarization with respect to everything else.

We could do a more extensive treatment by using the Poincare' sphere explicitly, but including the phase as well as the angles is a simple way to the useful result, in particular in our case of having linearly polarized light with no birefringence coming from the laser.

In general, we plot output intensity vs input polarization angle. The goal is to find the transmission when the input polarization is scanned for cases with a given end-fiber polarization acceptance angle, and given birefringence in the fiber.

To extend this for unpolarized input light, we would simulate various polarizations, and assume each exists for the time of a coherence length.

It is also simple to build a free space hardware simulator with a few objects having birefringence, and a hardware fiber simulator if a sufficiently long fiber with typical stresses can be found.

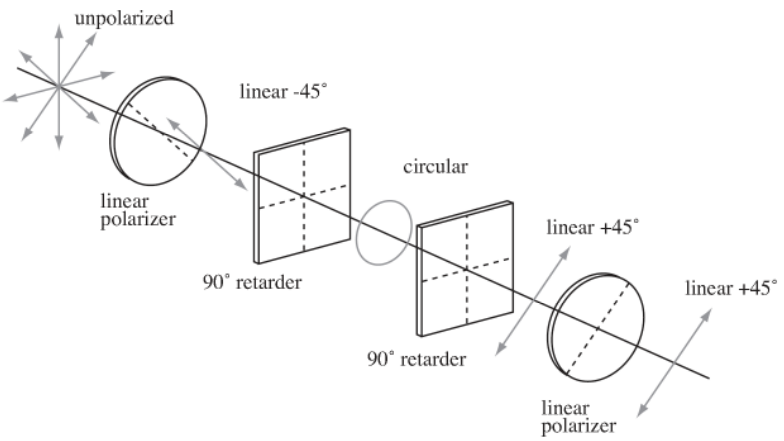

Figure 3. Example of special case with 45 degree polarizers and ¼ wave plate.

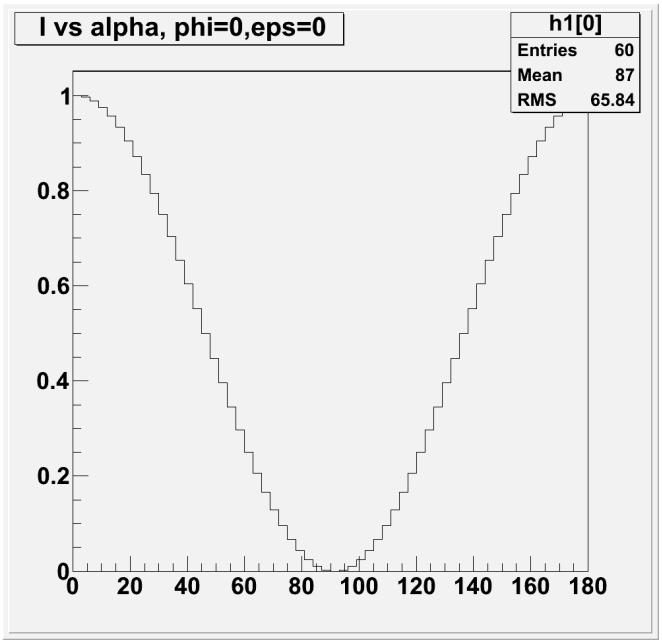

Fig. A. Output intensity vs input polarization angle for no birefringmence, and for the polarizer at the modulator aligned with the input and with any possible birefringence. (from a modification of formulas in ref [Class])

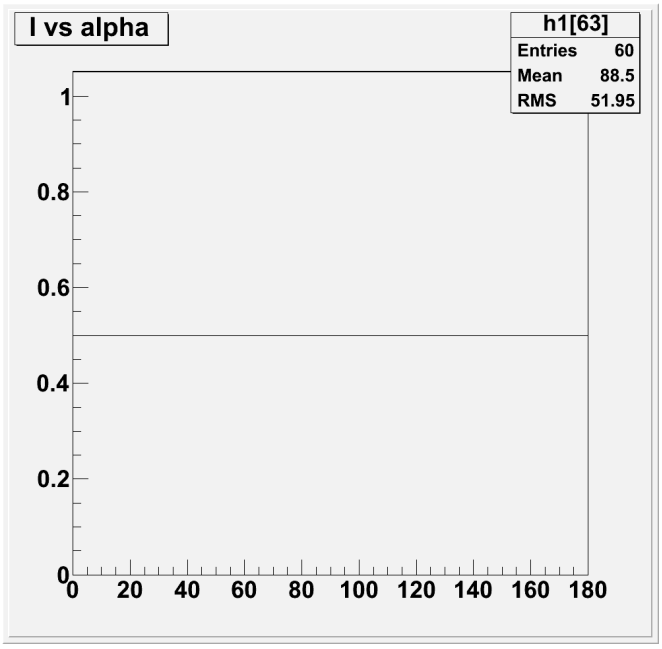

Fig. B. Output intensity vs input polarization angle for the very special case of 90 degree phase shift birefringence like a ¼ wave plate with output polarizer at 45 degrees to the plate. This is the worst case transmission of power if one is able to optimally rotate the input polarization. We should look at this for unpolarized light.
(from a modification of formulas in ref [Class])

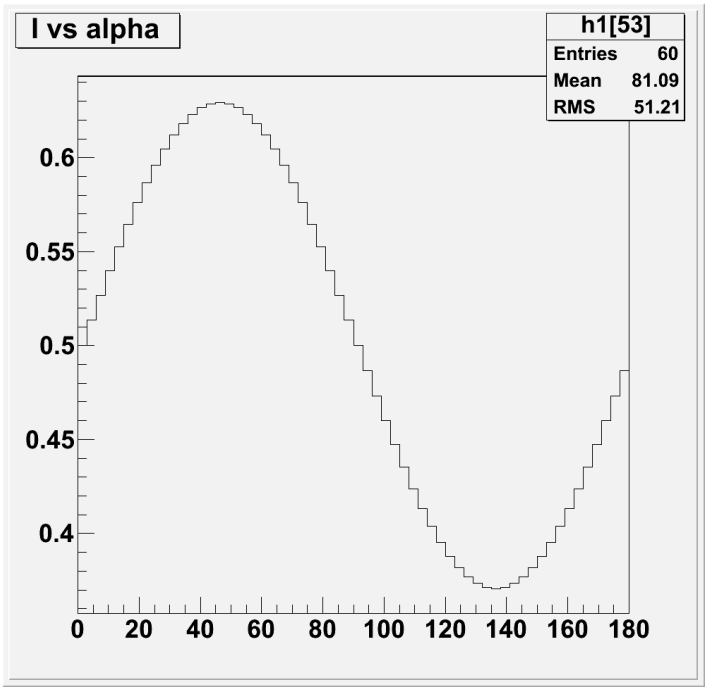

Fig. C. Output intensity vs input polarization angle for birefringence only slightly different from the very special case of 90 degree phase shift birefringence like a ¼ wave plate with output polarizer at 45 degrees to the plate. This is 75 degree relative phase shift, and one can optimize to about 63 percent power.
(from a modification of formulas in ref [Class])

Modified code, derived from from equations in the Rice/Dodds notes

```
   for(ialp=0;ialp<60;ialp++){
    alpd=3.0*(float)ialp;
    alp=alpd*dtor;
      thd=0.0-alpd;
      th=0.0-alp;
        for(ieps=0;ieps<7;ieps++){
        epsd=15.0*(float)ieps;
        eps=epsd*dtor;
//   for each eps, we look for best phi
         for(iphi=0;iphi<10;iphi++){
         phid=15.0*(float)iphi - alpd;
         phi=phid*dtor;
        kkhist=iphi+10*ieps;
      plus = cos(th)*cos(phi) + sin(th)*sin(phi);
      minus= sin(th)*cos(phi) - cos(th)*sin(phi);
     term1=  cos(th)*cos(th)*(plus*plus);
     term2= sin(th)*sin(th)*(minus*minus);
     term3= 2*cos(eps)*cos(th)*sin(th)*(plus)*(minus);
     I2I0=term1+term2+term3;
           h1[kkhist]->Fill(alpd,I2I0);  // angle, weight
    }  // end ieps
   }  // end iphi
  }  // end ith
```

APPENDIX IV Other Polarization Rotators

There are polarization rotation devices for spin ½ objects such as protons, and not just spin 1 photons. This is only one of many examples.

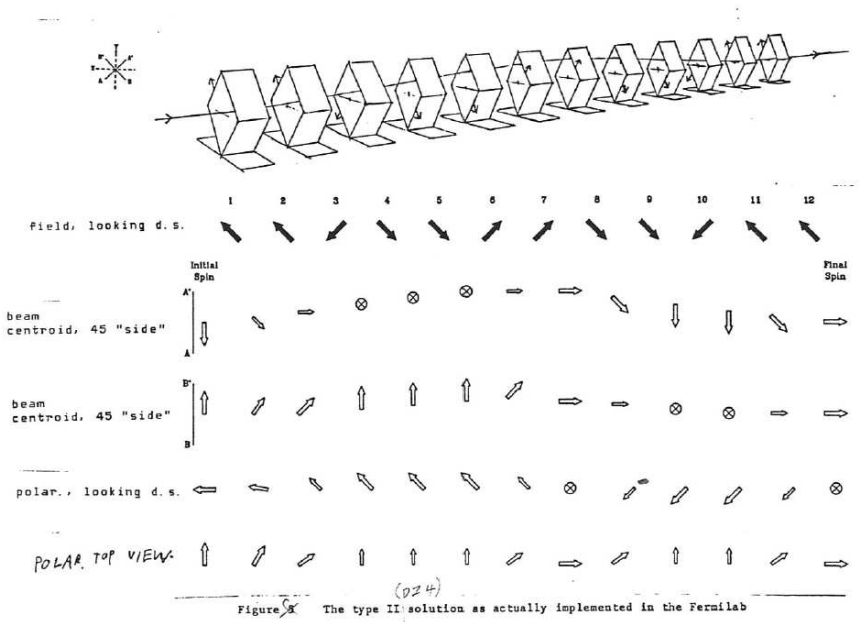

Figure 6 (DZ4) The type II solution as actually implemented in the Fermilab Polarized Beam. The overall rotation is π/2 around the vertical axis. We have not used the continuously variable feature. Some of the magnets requiring higher strength are physically made of two magnets and so 12 magnets appear in this diagram.

a) the orbit and field directions.
b) the field directions looking downstream.
c) the spin direction looking from below on the right.
d) the spin direction looking from above on the right.
e) the spin after each magnet, looking downstream.
f) the spin direction looking from directly above.

Survey of Eight Magnet Spin Precession Snakes, D.G. Underwood, Nucl.Instrum.Meth. 173 (1980)

/// / //// / / /

[Pol Maintain] Polarization Maintaining Fiber prices for 50 meters of PM and SM
Cost of PM fiber is about a factor of 4 or 5 higher than cost of SM fiber.
http://www.thorlabs.com/NewGroupPage9.cfm?ObjectGroup_ID=1596

Polarizing film for 1550 nm around $1000 ea
http://search.newport.com/i/1/x1/pageType/q1/Products/q2/Optics/q3/Waveplates%20%2526%20Polarizers/x2/section/x3/chapter/nav/1/

Optical Isolators around $200
http://www.thorlabs.com/NewGroupPage9.cfm?ObjectGroup_ID=6178
these work by polarizing the beam and rotating the polarization by 45 degrees.
But are not simple, with crystals and collimators internally.

[Rotating Source] Laser and rotator built into one unit over $2000.00
http://www.ozoptics.com/ALLNEW_PDF/DTS0073%20NEW2%20Polarized%20Fiber%20Optic%20Source..pdf

[Rotary Joint]Fiber optic rotary joints: Princetel around $1000.00
http://www.princetel.com/product_forj.asp
less than 3 db insertion loss, and less than 0.25 db ripple during rotation
The advantage over a pressure rotator is that one can read off the angle of this.

[Paddle] claimed to be ubiquitous and near optimal – large disk FPC561 around $250
It may be an issue that one cannot know the angle to which is set without a 3 dimensional map of the paddle angles.
http://www.thorlabs.com/NewGroupPage9.cfm?ObjectGroup_ID=343

[Newport pressure] Fiber Polarization controller - manually adjust the angle around $450
It may be an issue that one cannot know the angle which is set a-priori without calibration, and this angle could drift with time or cycles of use.
http://search.newport.com/?q=*&x2=sku&q2=F-POL-PT-FCUPC

inline fiber polarizer – which we need to analyze fiber output
(used as an analyzer- e.g. fake modulator)
Newport around $400, Thorlabs around $320
http://search.newport.com/?q=*&x2=sku&q2=F-ILP-2-F-SS-FP
http://www.thorlabs.com/thorProduct.cfm?partNumber=ILP1550SM-FC

inline fiber DePolarizer Phoenix cost 200 LB British (120 on ebay)
[Depol] http://www.phoenixphotonics.com/website/products/fiber%20optic%20depolarizers.htm

Directional coupler – Polarization maintaining
around $1800 from Newport, around $700 from ACPhotonics.
http://search.newport.com/?q=*&x2=sku&q2=F-PMC-1550-50
http://www.acphotonics.com/products/Product%20files/PM%20Products/Polarization%20Beam%20Combiner-Splitter.htm

Servo Controller - interface small model servo to PC

[Pololu] http://www.pololu.com/catalog/category/12

[Theory] *Transmission of linearly polarized light through a single-mode fiber with random fluctuations of birefringence*
http://www.ipr.umd.edu/Optical/Publications/pub99-2.pdf

[Walker and Walker]
Polarization Control for Coherent Communications, Nigel G. Walker and Graham R. Walker, Journal of Lightwave Technology Vol.8, No.3, 1990
http://ieeexplore.ieee.org/iel1/50/1855/00050740.pdf?arnumber=50740

[Newport analysis] Note by Newport company on measurements of rotation in fibers
http://assets.newport.com/webDocuments-EN/images/12143.PDF

[Coiled Fiber Faraday]
http://ieeexplore.ieee.org/xpl/articleDetails.jsp?reload=true&arnumber=477272&contentType=Journals+%26+Magazines

What is a Faraday Optical Isolator and How Does it Work?
http://www.dmphotonics.com/Faradays_QA.htm

Fiber polarization vs pressure
http://www.chiralphotonics.com/Web/polarizer.html
graph is log(load) not load

[Hotchips_Holo] Holographic lenses for integrated Silicon optics chips can be made to capture only one input polarization. http://www.hotchips.org/wp-content/uploads/hc_archives/hc21/2_mon/HC21.24.200.I-O-Epub/HC21.24.220.Kucharski-Luxtera-40Gbps-CMOS-Optical-Transceiver.pdfIn

[Class] Class notes on polarization
With formulas for circular and linear and filters
http://www.owlnet.rice.edu/~dodds/Files231/polariz.pdf

[Coherence] does not really address our issue, but has a table of coherence lengths
http://www.iet.ntnu.no/Courses/tfe4160/Notater/Polarization,%20coherence,%20interference%20and%20lasers.pdf

Acrylic plate Faraday modulator
Simple Laser-Light Modulator with Acrylic Plate Faraday Rotator for Educational Use
Magnetics in Japan. IEEE Translation Journal on. Date of Publication: Feb. 1987
Author(s): Okamoto, K.
http://ieeexplore.ieee.org/xpl/articleDetails.jsp?reload=true&arnumber=4549363&contentType=Journals+%26+Magazines

[Experimental]Experimental study of polarization rotation in fibers
Experimental Investigation on Polarization Rotation in Twisted Optical Fiber Using Laboratory Coordinate System, Fiber and Integrated Optics , Volume 29, Issue 1, 2009 ,

DOI:10.1080/01468030903377208 Hala J. El-Khozondar[ab], Mathias S. Müller[a], Thorbjörn C. Buck[a], Rifa J. El-Khozondar[cd] & Alexander W. Koch[a]
http://www.tandfonline.com/doi/abs/10.1080/01468030903377208#preview

Gunn Holographic Lens
Figure 2 from "10 Gb/s CMOS Photonics Technology' by C. Gunn, SPIE Vol 6125 Silicon Photonics Jan 2006.

==========

High Energy Physics Division
Argonne National Laboratory
9700 South Cass Avenue, Bldg. 362
Argonne, IL 60439-4815

www.anl.gov

Argonne National Laboratory is a U.S. Department of Energy
laboratory managed by UChicago Argonne, LLC