Eric D. Isaacs
Director
President, UChicago Argonne, LLC

Argonne National Laboratory
9700 South Cass Avenue, Bldg. 201
Argonne, IL 60439-4832

1-630-252-5749 phone
1-630-252-7923 fax
1-630-400-4029 mobile
isaacs@anl.gov

June 10, 2009

Mr. Ronald J. Lutha, Site Manager
Argonne Site Office
U.S. Department of Energy
9800 South Cass Avenue
Argonne, IL 60439-4899

Dear Mr. Lutha:

Subject: **Revision to the Argonne Wakefield Accelerator (AWA) Safety Assessment Document (SAD)**

The Argonne Wakefield Accelerator (AWA) Safety Assessment Document (SAD) has been revised to reflect conditions related to current operations at the facility. The 2-beam accelerator consisting of the "Drive Beam" and the "Witness Beam" accelerators in the previous SAD have been removed and decommissioned. Only one accelerator remains in the south end of the AWA vault. This new and simpler configuration is reflected in the revised SAD.

Enclosed for your information and use is an Argonne approved AWA SAD, Revised April 2, 2009. This revision has been reviewed and approved in accordance with the Argonne Accelerator Safety Procedures. There is no change to the previously DOE-approved AWA Accelerator Safety Envelope.

An electronic copy of the revised AWA SAD has been provided to Pete Washburn, of your staff. If you have questions, please contact Leon Reed at 2-4478

Sincerely,

Eric D. Isaacs
Director
President, UChicago Argonne, LLC

Enclosure

P. Washburn (DOE-ASO), w/o

JL

bxc: S. Butala
M. Conde
W. Gai
S. G. Meredith
J. P. Quintana
L. T. Reed
A. P. Sattelberger
H. J. Weerts
D. Whitaker-Sheppard DW-S
G. H. Zeman
OTD File

ARGONNE NATIONAL LABORATORY

HIGH ENERGY PHYSICS

AWA

ARGONNE WAKEFIELD ACCELERATOR

AWA SAFETY ASSESSMENT DOCUMENT (SAD)

Written by: **Manoel Conde and Zikri Yusof** **Date: 04/02/2009**

Approved:

HEP-AWA Group Leader: _____ **Date:** 5/15/09
Wei Gai

HEP-ESH Administrator: _____ **Date:** 5/15/2009
Leon Reed

HEP-Division Director: _____ **Date:** 5/15/09
Harry Weerts

SAD for the Argonne Wakefield Accelerater (AWA)

April 02, 2009

1. Introduction and General Description of the AWA

1.1 HEPD's role in advanced accelerator R&D
1.2 The AWA proposal

2. Summary of the safety analysis

2.1 Description of potential hazards and mitigation means
2.1.1 Radiation hazards
2.1.2 Fire hazards
2.1.3 Laser hazards
2.1.4 Toxic hazards
2.1.5 Microwaves
2.1.6 High pressure or explosion hazards.
2.1.7 Other occupational hazards
2.1.8 Hazards from natural phenomena

2.2 Summary risk analysis

3. Description of AWA Facility

3.1 Equipment configuration

3.1.1 Overview
3.1.2 Location
3.1.3 Layout
3.1.4 Operations

3.2 Electron source and linac

3.2.1 Photocathode gun
3.2.2 Laser system
3.2.3 rf system
3.2.4 Linac
3.2.5 Beam dump

3.3 Wakefield measurement system

3.3.1 Test section
3.3.2 Spectrometer
3.3.3 Power supplies
3.3.4 Diagnostics

3.4 Control and data acquisition

3.5 Experimental program

3.5.1 High current beam generation
3.5.2 Dielectric and other structure wakefields
3.5.3 High power generation

3.6 Training and certification

3.6.1 General training
3.6.2 Specialized training and certification

4. Safety Analysis, Systems, and Procedure Descriptions

4.1 Systems used to mitigate hazards

4.1.1 Safety systems
4.1.2 Controls for abnormal occurrences

4.2 Radiation

4.2.1 Shielding
4.2.2 Personnel access control
4.2.3 Interlock system
4.2.4 External radiation monitoring .
4.2.5 Personal monitoring
4.2.6 Activation and toxic gas production hazards
4.2.6.1 Air activation
4.2.6.2 Water activation
4.2.6.3 Other materials activation
4.2.6.4 Ozone production

4.3 Laser

4.3.1 Laser room
4.3.2 Accelerator vault

4.4 Rf power system safety

4.4.1 Microwave
4.4.2 X-ray

4.4.3 Electrical shock

4.5 Other safety systems

4.5.1 Fire
4.5.2 Toxic chemicals/gases

4.6 Accident Analysis

4.6.1 Failure modes for the Interlock System

4.6.1.1 Relays
4.6.1.2 Switches
4.6.1.3 Wiring
4.6.1.4 Monitors

4.6.2 Accident Scenarios

4.6.2.1 Personnel in vault with beam/rf on
4.6.2.2 Excess radiation outside vault
4.6.2.3 Electric shock
4.6.3 Maximum Credible Accident

5. Safety envelope

6. Miscellaneous Issues

6.1 Quality Assurance
6.2 Environmental Monitoring
6.3 Decommissioning and Decontamination

Appendix I -Shielding Analysis for the AWA

SAD for the Argonne Wakefield Accelerator (AWA)

1. Introduction and General Description of the AWA

1.1 HEPD's role in advanced accelerator R&D

The High Energy Physics Division (HEPD) of Argonne National Laboratory conducts research focussed on advanced accelerator physics and the development of new accelerator technologies. This research is driven by the recognition that future (post LHC) high energy accelerators will almost certainly be e^+e-linear colliders, and that present technology is not adequate for such machines. Foremost among the required developments are accelerating gradients at least several times that presently available with an acceptably high "wall-plug" power efficiency. The DOE supports a research program under the auspices of the Advanced Technology Section of its High Energy Physics Division which addresses these needs, and it is this program which supports the Argonne work.

HEPD's Accelerator R&D Group is the leader in research on a particular technology, the so-called "wakefield" acceleration. The group developed a unique facility several years ago called the Advanced Accelerator Test Facility (AATF) with which it carried out an extremely productive experimental program on wakefields. The AATF was based upon the use of the existing 20 MeV electron linac operated by the Chemistry Division (CHM). Although the CHM linac can produce relatively short electron bunches, the available charge per bunch limited wakefield experiments to "proof of principle" regimes of accelerating gradients. Nevertheless, the research demonstrated the validity of the wakefield accelerating principle and formed the basis of an important next stage.

1.2 The AWA proposal

Demonstration of wakefield acceleration at significantly higher performance levels will require the use of considerably more intense beam pulses than can be produced at the CHM linac. A proposal was, therefore, prepared and presented to the DOE in the summer of 1990 that a new experiment be constructed. That new experiment is called the Argonne Wakefield Accelerator, the AWA.

The AWA facility has been used for high intensity beam related experiments and performs world-class pioneering research on beam-structure interaction, such as beam- and rf- driven acceleration concepts. Our past major accomplishments include: the first ever demonstration of collinear wakefield acceleration in dielectric devices, plasmas, and disk-loaded structures; the first ever direct measurement of transverse wakefields in linac structures, including the NLC prototype design; generation of ultrahigh current electron beams, unique among RF photocathode based linacs; production and measurement of high accelerating gradients in both plasmas and dielectric structures; and origination and demonstration of the principle of the two beam acceleration using dielectrics; first ever high-power testing of dielectric accelerating structures that lead to the discovery of a new multipactoring phenomena; and first ever observation of Schottky enabled photoelectron

emission in an RF photocathode gun with possible application for high brightness electron beam generation.

2. Summary of the safety analysis

The AWA installation presents several potential hazards. This section contains a brief identification of these hazards and a summary risk analysis. A more detailed description of AWA equipment is presented in section 3. Section 4 contains the detailed risk analysis and a description of safety systems and procedures.

2.1 Summary description of potential hazards and mitigation means

2.1.1 Radiation hazards

The AWA electron source and linac accelerate bunches of electrons to a peak energy of about 20 MeV. These bunches may contain up to 400 nC of charge (100 nC design), and may be generated at a peak rate of 10 per second. Such beam can produce large radiation fields. Based upon the calculations of R. Veluri (Appendix I), the largest radiation field present produces a maximum dose rate of 1800 rem/hr inside the AWA vault.

The rf power supply includes a klystron operating at roughly 290 kV (pulsed) which can produce x-rays. A lead shield is provided for the klystron. Measurements by ANL Health Physics during klystron checkout have determined that no excess radiation above background is present outside of the klystron shield except for 20 mrem/hr at the waveguide penetration.

Activation of air, water, and materials is possible. Air and water activation effects are negligible, and material activation problems are minimized by appropriate choices of materials used for apparatus construction. An interlock system is provided to abort the beam in case of accidental access to the vault. In addition, the interlock system will inhibit accelerator operation during access to the vault and will require a vault survey before beam can be enabled.

2.1.2 Fire hazards

The AWA uses very limited quantities of combustible materials. Paper in the form of computer manuals and logbooks is present in the control room. Solvents (acetone, ethanol) in amounts <500 m1 are used for cleaning apparatus. No combustible materials are present in the AWA vault.

The 248 nm beam from the laser system has a maximum power <150 mW and does not present an accidental ignition hazard either in the laser room or vault. The only lasers in the system which presents a potential ignition hazard are the Nd:YAG and Nd:YVO which develop a maximum power of 5 W. Transport of these beams is confined to short distances (<1m) on

the laser table and the entire beam path is enclosed in Lexan tubes to prevent accidental interception of the beam. The enclosing robe is not combustible and has been tested by deliberately intercepting the laser beam. All components in the beam transport are designed by the vendor to be able to handle the maximum beam power with no possibility of ignition or other damage by the beam.

Electrical malfunctions in power supplies and minor electrical equipment present the principal fire hazard at the AWA.

Building evacuation in the event of fire is covered in the Local Area Emergency Plan. Sprinkler systems have been provided in all areas of the AWA.

It should be noted that the smoke detectors will activate an alarm but will not activate the sprinklers which are heat activated only. Thus release of smoke in the laser room from the unlikely accidental burning of a target would not lead to sprinkler activation and concomitant electrical shock problems.

2.1.3 Laser hazards

A sophisticated laser system is used to illuminate a photocathode for the production of the electron bunches. This system is treated as a Class-IV laser hazard, with the potential of causing eye injury and skin burns.

A laser interlock system (separate from the radiation interlock system) is provided to prevent accidental access to the laser room or vault when the laser is operating. Personnel working in the laser room or vault with the laser on will have received appropriate training and will wear protective glasses.

2.1.4 Toxic hazards

A toxic/irritant gas is used in the laser system in the form of Fluorine (premixed with inert gas by the gas vendor in concentrations of .24%) in the excimer laser. Laser gas bottles are kept in a gas cabinet with positive ventilation to the outside. An audible alarm will indicate flow failure.

Ozone may be generated by the beam inside the vault. The path length of beam in air is made as small as possible and adequate ventilation is provided in the vault.

2.1.5 Microwaves

1.3 GHz rf at a power level of 25 MW is generated in 6 μs pulses at 10 pps (max). This level of rf power could be hazardous if not properly contained.

The rf system is designed to limit rf emissions to within ANSI standards (see Section 4.4.1). Industrial hygiene will monitor rf emissions during commissioning and after any system modifications to ensure this.

2.1.6 High pressure or explosion hazards

A small compressor unit supplies air at approximately 50 psi to control small actuators in beam diagnostic ports.

Compressed gas cylinders supply gases used by the laser system. These cylinders may be pressurized up to 2500 psi when installed. Small high quality gas lines (1/4" typ.) carry reduced pressure gases from regulators on the cylinders to the appropriate lasers.

Sulfur Hexafluoride (SF_6) is used to pressurize the L-band waveguides which distribute the RF power from the klystron to the RF cavities. The waveguides are pressurized to 13.5 psi, and the system is equipped with pressure relieve valves to prevent the pressure from accidentally reaching more than 15 psi.. Pressure switches are part of the RF interlock system, and will prevent RF production if the pressure falls below the set point; this will prevent arcing in the waveguides and also possible leakage of RF power.

The usual laboratory safety procedure (ANL ES&H Manual, Chapter 13) for handling and storing compressed gas cylinders is followed.

2.1.7 Other occupational hazards

Electric shock is a common laboratory hazard. The AWA rf power supply is a potential electric shock hazard when installation and maintenance require stat work on equipment located inside the interlocked cabinet with the supply 2.3 energized. Under these circumstances, troubleshooting hot procedures as described in the ANL ES&H Manual (Chapter 9) will be in effect.

Power failure (building or local) can pose a hazard. All interlock systems are designed such that a local power failure breaks the interlock and aborts accelerator or laser operation. No automatic restart is provided when power returns. Emergency lighting is provided in the vault, control, and laser rooms.

Use of the crane in building 366 provides the possibility of injury from a hoisting or rigging accident. All hoisting and rigging will be performed in accordance accepted DOE and ANL rules as described in the ANL East Hoisting and RiJ Manual.

Beyond the specific hazards listed, the AWA presents no unusual occupational risks.

2.1.8 Hazards from natural phenomena

The ANL site experiences 40 thunderstorms on average each year, occasionally with concomitant hail, strong winds, or tornadoes. The probability of a tornado strike with winds in excess of 150 mph is estimated at $3x10^{-5}$/year, or one every 33,000 years. The area has been visited by less severe tornadoes. The Local Emergency Plan for building 366 covers evacuation and sheltering in the event a tornado warning.

No active tectonic features within 62 mi of ANL are known. Peak acceleration from earthquakes may exceed 0.1 g (approximate damage threshold) approximately once every 600 years.

Natural hazards pose no greater risk for the AWA than any other location on Argonne site and will not be treated further in this document

2.2 Summary risk analysis

Potential safety hazards associated with construction and operations of the AWA and the means used to mitigate them are summarized in table 2.1. The AWA in all phases provide negligible offsite and minor onsite impact to people or the environment, complies with the definition of a low hazard experiment as per DOE order 5481.1B

Table 2.1. AWA Hazard/Safety Analysis Summary

HAZARD	MAXIMUM CONSEQUENCE(S)	MITIGTION MEANS	COMMENTS
Personnel Safety Hazards:			
Photocathode gun and Linac x-ray emissions, personnel exposure	minor radiation exposure	access control system, shielding, interlocks	access not normally permitted. Interlock system prevents inadvertent/accidental access to vault while rf is on.
Exposure of personnel to x-ray emissions from rf equipment	minor radiation exposure	access control system, lead shielding monitors, alarms, interlocks	personnel will not normally have access to rf cabinets; access requires special monitoring
Prompt neutron/gamma emission from wakefield beam1ines and beam dump	severe radiation exposure	shielding, labyrinths, access control system, local component shielding interlocks	
Induced radioactivity in the accelerator, air, water, or shielding	minor radiation exposure	shielding, access control, interlocks	
Inadvertent entrapment of personnel within shielding	severe radiation exposure	access control system, search procedure, warning systems, manual shutdowns via safety switches, interlocks	
Electric shock/burns (prime power)	death	electrical safety program,design to codes	normal industrial/laboratory . hazard
Electric shock/burns from rf power supply (high rf power and/or high DC voltages)	death	electrical safety program, design to codes access control system, rf power leak monitoring	normal industrial/laboratory hazard. Troubleshooting hot rules.
Electric shock/burns from laser power supplies	death	electrical safety program, design to codes, interlocks, training	normal industrial/laboratory hazard
Excessive rf/microwave	injury	good design, operating practice, and maintenance. Monitor rf leakage. Limit access to rf supply cabinets Interlocks.	normal industrial/laboratory hazard

Personnel exposure to laser (Class IV)	eye injury, burns	Interlocks to laser room and accelerator vault. Use of appropriate eye protection. Adherence to laser safety rules.	normal industrial/laboratory hazard
Personnel exposure to laser gases	moderate injury	Venting system for gasses	not a significant threat to public or workers.
Ozone generation in vault	moderate injury	adequate ventilation in vault Beam path length in air is minimized.	not a significant threat to public or workers
Fire, ignition of combustible materials in the A W A vault or control/laser room	significant damage, injury	control of combustibles, welding, solvents, smoking. Smoke/heat sensors, sprinkler system. Building evacuation plan.	not a significant threat to the public
Collision or hoist failure during lifting/ handling operations.	death, significant equipment damage	good design/operating procedures, follow ANL hoisting and rigging policies, operator training.	normal industrial/laboratory hazard
High pressure gas cylinder death, breach/explosion	significant equipment damage	gas cylinders secured inside gas cabinet Follow good practice in changing gas bottles.	normal industrial/laboratory hazard
Equipment Damage Potential Only:			
Loss of accelerator vacuum with air entry	component damage	good design, operation, fast beam abort system	not a significant threat to public workers.
Loss of cooling water or cooling water flow	component damage	good design, operation, instrumentation, fast beam abort system	not a radiation threat to public or workers
Electric power failure	downtime	systems designed to be failsafe on loss of electric power. Emergency lighting provided in laser and control rooms and accelerator vault	
EMI from rf system	downtime, degraded operations/ Accelerator performance	adequate shielding and grounding of rf supply cabinets and control electronics	

3. AWA Facility

3.1 Equipment Configuration

3.1.1 Overview

The beam of the Argonne Wakefield Accelerator experiments is provided by an electron linac based on laser photocathode gun technology capable of delivering short, intense electron bunches at 15 MeV. Beam diagnostics, controls, shielding, safety equipment, and appropriate services required for safe, productive operation are also included.

The Accelerator Safety Envelope (ASE), presented in Section 5, is based on operation at 20 MeV, 400 nC per pulse, and 30 pps. These parameters are well above the present capabilities of the facility (15 MeV, 150 nC, 10 pps), and thus imply an even larger safety margin for the operation of the facility.

3.1.2 Location

The AWA is located in building 366. The building is owned by the High Energy Physics Division, and was chosen as the site of the AWA on the basis of several considerations. The availability of services (cooling water, power, compressed air) was a significant factor, as was the presence of assembly areas and an overhead crane.

3.1.3 Layout

A plan view of the AWA is shown in Fig. 3.1. The photoinejctor, linac, and wakefield measurement apparatus are located in a shielded enclosure (vault). Entrance into the vault is via labyrinths at the north and west ends of the enclosure. A second enclosure, of wallboard/metal stud construction in accordance with ANL safety regulations, is divided into two rooms to separately house the laser system and the AWA control room.

Racks for magnet power supplies and other control and diagnostic electronic are located on the roof of the AWA vault. Cables from the racks are routed through penetrations in the roof shielding via cable trays and terminated in barrier boxes inside the shielded enclosure. The penetrations form a 90° labyrinth which do not allow any line of sight transmission of radiation from the linac tanks, the primary source of radiation inside the vault. Lead blocks/shots are stacked around the penetrations to provide shielding equivalent to that of the remainder of the vault.

The rf power supply is located against the west wall of the building. Wave guides transport the rf power to the gun and linacs through penetrations in the wall of the shielded enclosure.

3.1.4 Operations

The AWA linac is designed to produce under normal operating conditions 15 MeV, 100 nC electron bunches at a maximum rep rate of 10 Hz. The AWA essentially is operated "on demand", depending on the requirements of the experimental program, typically not more than 3-4 shifts/week.

3.2 Electron Source and Linac

3.2.1 Photocathode Gun

The photocathode gun is used to produce up to 150 nC electron pulses at 8 MeV. Laser light striking a photocathode (copper or magnesium) in the accelerating cavity causes the emission of electrons. The cavity dissipates approximately 900 W and is water-cooled; it is maintained at a pressure of 10^{-9} Torr or better.

The cathode lies at the mid-plane of two identical solenoids located immediately upstream and downstream of the cavity. These solenoids are powered by individual 600A supplies and together dissipate about 20 kW. Both coils are water cooled. The entire assembly is supported on a rigid optical table. Beam elevation is approximately 4' above the floor.

3.2.2 Laser System

The laser system is designed to deliver short UV pulses for producing photoelectrons in the photocathode gun. (Maximum of 15 mJ/pulse at a wavelength of 248 nm and maximum repetition rate of 10 Hz.) This is a Class IV device and appropriate safety procedures as described in Chapter 6-2 of the ES&H Manual are followed. The system is configured as shown in Fig. 3.2. It consists of a mode locked Ti:Saphire laser, a Ti:sapphire amplifier, and pump by Nd:YAG lasers. In addition, an Excimer amplifier is used to amplify the laser energy to 15 mJ/pulse. The characteristics of each laser subsystem are given in Table 3-1. Every subsystem is treated procedurally as a Class IV Laser.

3.2.3 RF System

The rf system supplies rf power at 1.3 GHz (L-Band) to the gun and linac. The system consists of a 30 MW (peak) klystron amplifier and modulator. Supply enclosures are kept physically locked and are interlocked to avoid the possibility of accidental contact with harmful voltages. The rf cabinet interlocks are described in Section 4.2.3 below.

3.2.4 Linac

The linac is a 1 m long iris-loaded, standing wave cavity which accelerates the beam delivered by the photocathode gun to 15 MeV. It shares a common support structure with the gun. The linac structure dissipates approximately 1 kW and is water-cooled and temperature-regulated. rf power is delivered to the cavity via a wave guide which enters the shield enclosure through a wall penetration.

3.2.5 .Beam dump

Beam from the linac will preferentially be dumped into a carbon (graphite) block surrounded by lead bricks. This beam dump is located at the end of the beamline, and requires that the beam exit the beamline through a Be window or a quartz window, and traverse a short distance in air. Alternatively, the beam can be stopped inside the beamline, hitting an aluminum target. Another possibility, which occurs frequently during wakefield experimets, is that the beam may be lost onto the beamline pipe and diagnostic components, simply because it may be strongly overfocused by the magnets.

3.3 Wakefield Measurement System

3.3.1 Test Section

The wakefield devices under measurement are placed in the test section immediately downstream of the beamline. Beam position monitors are provided on the upstream and downstream ends of this section to aid beam tuning. The types of wakefield devices to be studied are described in detail in Section 3.5.

3.3.2 Spectrometer

The spectrometer consists of a dipole magnet with a YAG screen located the focal plane. The bending plane is vertical. The magnet used for the spectrometer will depend on the energy resolution required by the particular experiment. The spectrometer also directs the drive beam into the beam dump.

3.3.3 Power Supplies

Commercial power supplies are used for the beamline and spectrometer magnets. The bend magnets require on the order of 100 A, and the quads and trim magnets ~10 A. Voltages required are ~10V. Power terminals for all magnets are insulated. All supplies are under remote computer control.

3.3.4 Diagnostics

Ce doped YAG crystals are used for beam position monitoring. Since this is a destructive monitoring, movement of the screens into and out of the beamline is accomplished through the use of remotely controlled pneumatic actuators. Light produced by the beam on the screens is viewed by standard CCTV cameras. The video signals can be digitized for computer analysis.

3.4 Control and Data Acquisition System

The main control for the AWA is done via a computer. All the data acquisition functions are handled by another independent PC.

Note that the interlock and other safety systems are independent of the AWA control system. Furthermore, operation of the accelerator requires activation of key switches in the control room.

3.5 Experimental Program

The experimental program at the AWA breaks down into three general categories: described below. The safety envelope as described in Section 5 encompasses all classes of experiments to be performed at the AWA

3.5.1 High Current Beam Generation

The production of high peak current electron bunches using laser photocathode source technology is an important experiment in its own right, as well as being a foundation for all other AWA wakefield measurements. Thus, the generation of high charge single electron bunches, as well as the generation of bunch trains with high charge per bunch, constitute the first necessary step in the successful execution of the experimental program at AWA.

3.5.2 Wakefield Experiments

The high peak current electron beam is used to excite wakefields in various types of RF structures. Most of these structures are dielectric loaded waveguides, that is, sections of metallic waveguide with a ceramic lining, but other kinds of wakefield structures are also pertinent to the experimental program. The general goal of these experiments is to excite high accelerating gradients in these structures.

3.5.3 High Power Generation

A slight variation of the Wakefield Experiments consists in driving wakefields in the structures mentioned in the previous section, and then extracting this rf power from the structures. Thus, these structures are designed to have an output rf coupler, which sends the generated rf pulse into a load or into another structure.

3.6 Training and certification

3.6.1 General training

All AWA personnel working in Building 366 are required to undergo the building orientation safety course. This course is intended to make the person aware of the hazards present in the building; it also offers guidance on what the person is allowed and expected to do while in the building.

Additionally, all AWA personnel or those who participate on experiments at AWA as collaborators, are required to completed the "AWA General Safety Orientation" safety course. This course serves to make those persons aware of the specific hazards present in the AWA facility, and also establishes what training is needed for people to perform particular tasks at the facility.

3.6.2 Specialized training and certification

Specialized training is needed for AWA members who operate the rf system, thus becoming rf operators. Similarly, specific training is needed to operate the laser system.

A list of certified rf operators and laser operators is posted in the AWA Control Room.

Table 3.1. AWA Laser System Parameters

Table 1. Commercial Active Type IV Lasers Present AWA Laser Room.

Laser	Manufacturer/Model	Function	Output
#1 100 MHz Ti:Sapphire Oscillator	Spectra Physics Tsunami	Provides seed pulses for TSA	10 nJ, 25 fs, 744nm-800nm, 100 MHz
#2 CW Nd:YVO	Spectra Physics Millenia V	Ti:Sapphire Oscillator Pump	5W, CW, 532nm
#3 10Hz Nd:YAG	Spectra Physics LAB-170	Pumps REGEN & linear Amp#1 for TSA 50	10Hz, 10ns, 532nm, 300mJ
#4 10Hz Nd:YAG	Spectra Physics PRO-230	Pump for linear Amp#2 for TSA 50	10Hz, 10ns 532nm, 500mJ
#5 10 Hz KrF Excimer	Lambda Physik LPX 105i	UV Amp	10 Hz, 10 ps 248 nm, 8 mJ

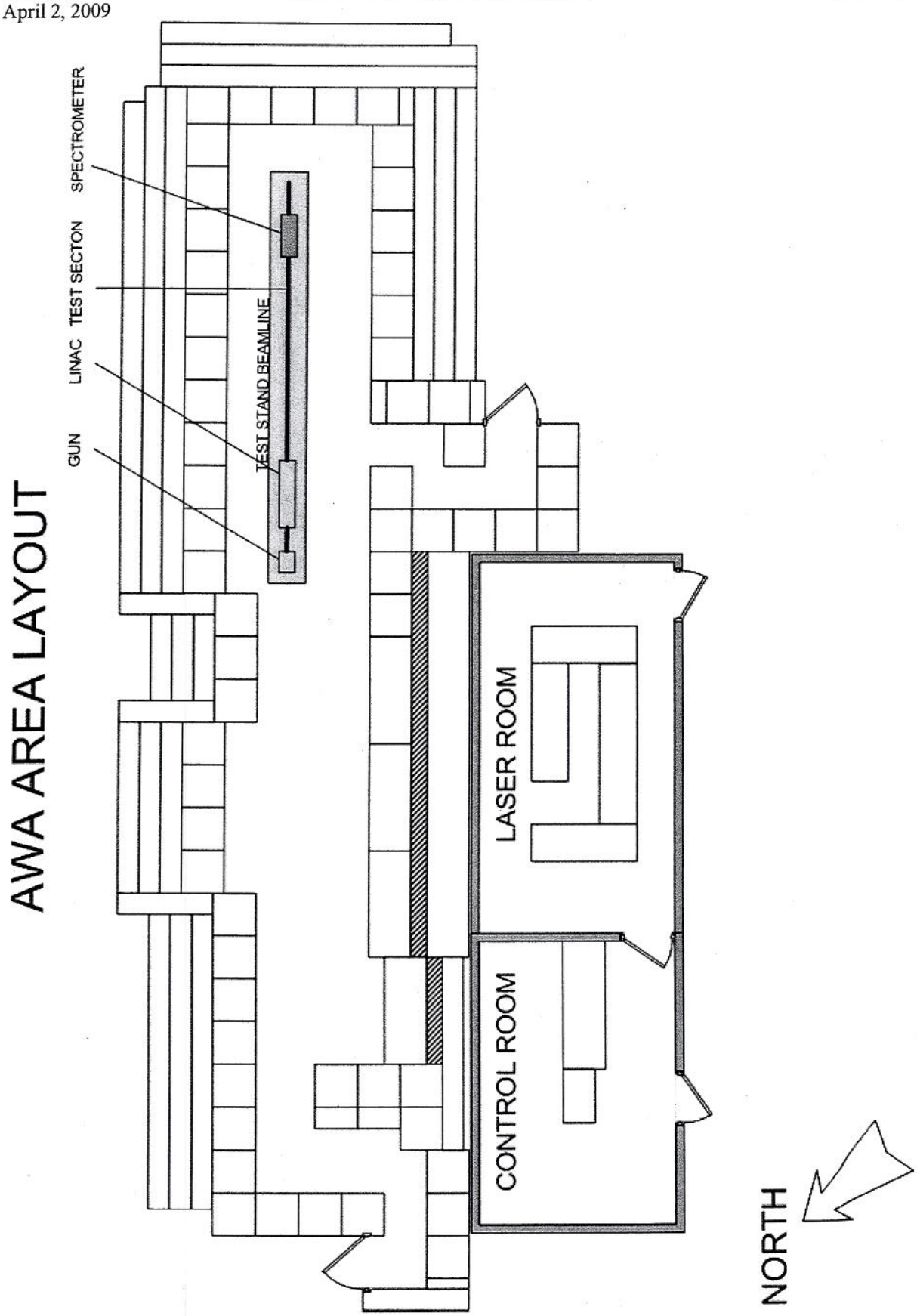

Fig. 3.1 AWA Plan View Showing New Shielding Configuration and Test-Stand Location

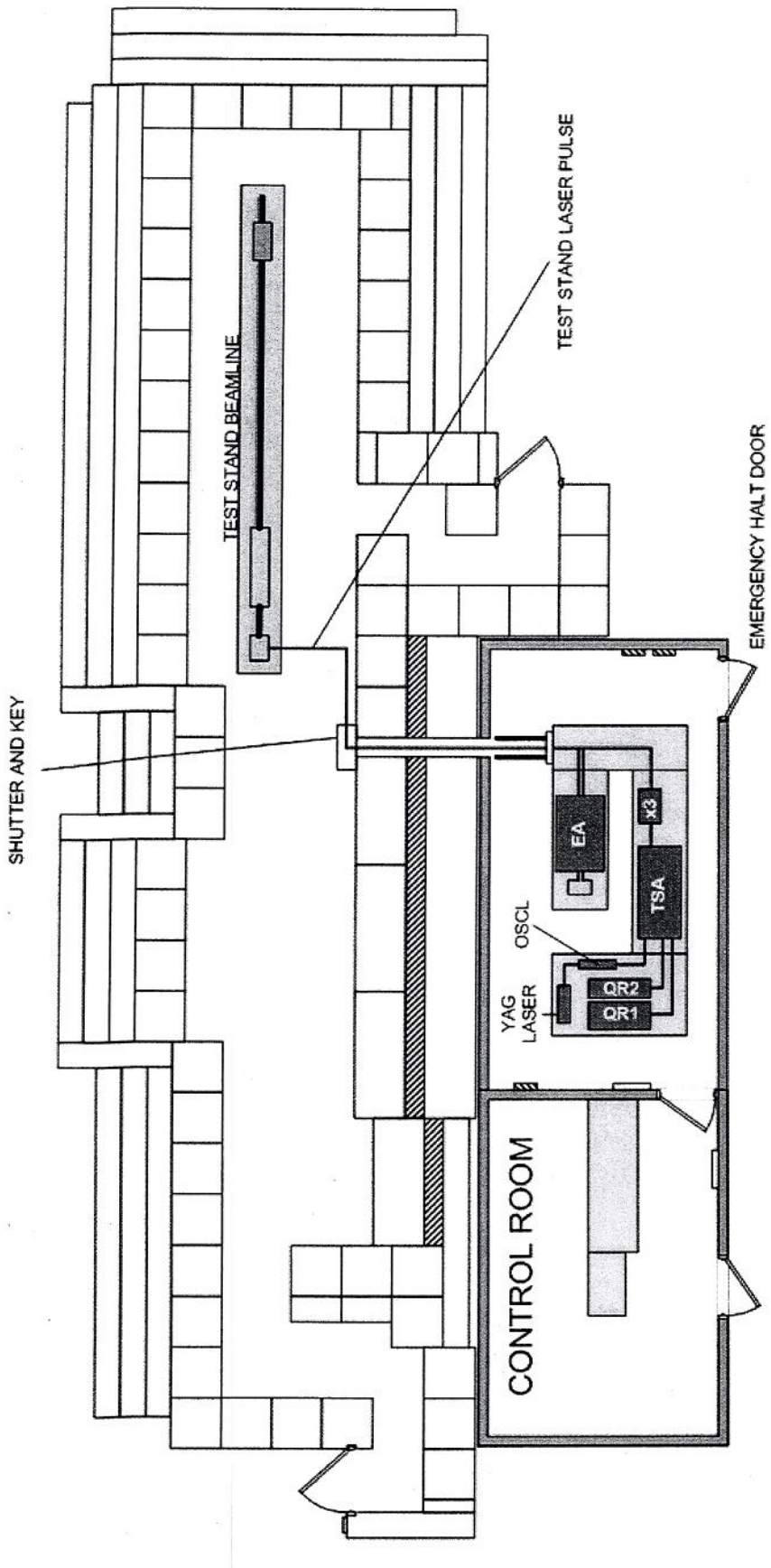

QR1 - QuantaRay 1
QR2 - QuantaRay 2
TSA - Ti-Sapphire Amplifier
x3 - Tripler
OSCL - Oscillator
EA - KrF Excimer Amplifier

SCALE 1:120

NOTE: Only the inner shielding layer is shown. Fig. 4.1 shows the full shielding configuration

Fig. 3.2 The AWA Laser System and Laser Beam Transport

4. Safety analysis, systems, and procedures

4.1 Systems used to mitigate hazards

4.1.1 Safety systems

Radiation safety at the AWA is implemented using both passive (shielding, labyrinths) and active (access control, interlock, fast beam abort) components. The access control system will prohibit access to the AWA vault while the accelerator is operating. Interlocks on the labyrinth doors and rf cabinets will cause a beam abort if entry is attempted during accelerator operation, as well as blocking accelerator startup until secured. In conjunction with the access control, a survey procedure for the vault is implemented. This procedure is described in Section 4.2.2 below and in the "AWA Radiation Safety System Procedures" document. Lights indicating a "beam on" condition are located in the control room, laser room, and at prominent locations above the shield. When the AWA vault survey is initiated, a klaxon will sound and a rotating warning light inside the shield vault will be activated.

During normal AWA operation (and any time the laser is operating) the laser room will be interlocked, and any unauthorized attempted entry results in a shutoff of the laser system. Laser system status warning lights will be located at the door between the laser and control rooms. During startup it will be necessary for personnel to be working in the laser room while the laser is in operation. In this case certified laser eye protection glasses and other appropriate laser safety protocols will be mandatory for those workers. Laser safety procedures are described in detail in the "AWA Laser Safety System" document.

The fast beam abort will shut off both rf power to the gun and linac, as well as closing a shutter in the laser beam path between the laser room and the vault. Each point in the fault chain is monitored from an indicator light panel and by the control electronics, providing rapid identification of origin of the abort.

4.1.2 Controls for abnormal occurrences

Any personnel inadvertently left in the vault will be alerted by the klaxon and rotating warning light. This personnel will be able to inhibit

accelerator startup or initiate a beam abort (including laser beam transport) by pulling a safety chain strung around the interior of the vault. Note that the survey procedure combined with the vault layout makes accidental entrapment in the vault highly unlikely.
In the laser room, "Panic Buttons," located at the interlock box and on the south wall, to permit personnel working inside the room to abort all of the laser subsystems in an emergency.

Rf supply cabinets are interlocked (as well as being physically locked) to prevent exposure to hazardous voltage levels. Special monitoring is in place if power-on access to the rf cabinets is required. ANL Industrial Hygiene has measured rf leakage at all waveguide connections during commissioning of the rf system and has deemed it safe for operations.

Fire protection is provided in the AWA control room, laser room, and accelerator vault via smoke sensors and heat sensing water sprinklers. Sprinkler systems have already been installed in the vault, control, and laser rooms. The ANL Fire Department will respond to an activated smoke sensor. This condition will also activate a local warning bell and initiate a beam abort if the accelerator is in operation.

4.2 Radiation

4.2.1 Shielding

Beams from the AWA can produce large amounts of radiation. Calculations by ANL Health Physics show that the largest dose rate present in the AWA vault during maximum intensity operations found immediately downstream of the accelerator is 1800 rem/hr. Shielding placed around the machine is designed to reduce radiation outside the vault to levels at or below those considered safe for normal working conditions. A detailed evaluation of the AWA shielding requirements was performed by ANL Health Physics and may be found in the Appendix of this document. NCRP Report No. 51, Radiation Protection Design Guidelines for 0.1 -100 MeV Particle Accelerator Facilities, provides the general procedures followed in these calculations.

Figure 4.1 shows the configuration of the AWA vault shielding. As shown in the Appendix, this configuration will be adequate up to an electron beam of 400 nC bunches at 20 Me V with a repetition rate of 30 Hz. This is much higher than the actual parameters AWA can reach: 150 nC, 15 MeV, 10 pps.

The gun cavity operates at high surface fields (~80 MeV/m) and is expected to be the principal source of dark current via field emission. The electrons produced in the gun by this process have a broad energy spectrum with a mean energy ~ 4 MeV. Because of the softer spectrum of the dark current relative to the laser-induced beam (<E>~8 MeV), the dark current contribution will tend to be severely over-focused by the solenoid and not captured effectively into the acceptance of the linac. A reasonable upper limit on the dark current-induced radiation field inside the AWA vault is 1 Rem/hr, compared with the maximum beam-induced dose rate of 1800 Rem/hr. The shielding calculations have been made based on the maximum possible laser- induced output of the drive linac.

Under normal operating conditions, the beam is preferentially dumped into the beam dump located in air at the downstream end of the beamline. However, quite often, due to requirements of the experiements, the beam is stopped inside the beamline, either striking an aluminum target or the stainless steel beampipes.

The maximum credible incident (MCI) scenario for radiation at the AWA is assumed to be the entire beam at maximum intensity (20 MeV, 400 nC, 30 pps) exiting the beamline through a thin quartz window and striking the downstream (south) shield wall of the vault. As shown in the analysis by ANL Health Physics (Appendix I), the maximum dose resulting from the MCI is 0.56 rem in a 1 hr period outside the south vault wall, and assuming the accelerator is operating at maximum intensity.

Radiation measurements have been made in circunstances where the entire beam was intentionally lost by striking a copper structure installed in the beamline (Appendix 2). These measurements show that if the beam parameters were scaled up from the actual values at the time of the measurement (15 MeV, 60nC, 5 pps) to the maximum nominal values defined in the ASE (20 MeV, 400 nC, 30 pps), there would be a radiation level of 30 mrem/hour at a point 100 cm above the roof the the AWA vault (area directly above the copper structure) and also a radiation level of 30 mrem/h at a distance of 30 cm from the South door of the vault. For this reason both of these locations have been designated and posted as Radiation areas when AWA operates.

4.2.2 Personnel access control

The AWA personnel access control system is designed to eliminate the possibility of any exposure of personnel to hazardous radiation levels. More specifically, the system

1. ensures that any occupant of the AWA vault is given a warning before the accelerator can begin operating.

2. provides the capability of personnel in the vault to prevent the accelerator from starting operation or to terminate accelerator operation.

3. prevents entrance of personnel to the accelerator vault while the accelerator is operating.

Refer to Fig. 4.1 for a diagram of the location of the access control system and other vault safety components. Details of the interlock circuitry are found in Section 4.2.3 below. Step by step description of the procedures outlined in this section are found in the "AWA Radiation Safety System Procedures" document.

The AWA vault is accessed via two labyrinths. Access to each labyrinth is through doors which use keys in electromechanical lock switches. Both doors must be closed and locked to complete the interlock chain and enable accelerator operation. Door closure is monitored by a lock switch and a contact switch on each door. Opening ether door during accelerator operation will initiate a beam abort. The door key is kept on a ring welded to the operator's main control key.

Two key trees, each consisting of six key lock switches, are located at the two vault entrances. Each person entering the vault must first remove a key from a key tree and retain that key while working in the vault. Removal of any key from the key tree will prevent accelerator startup by inhibiting power up of the rf supply. All keys must be returned to the key tree before normal accelerator operation can proceed.

Once access has been made to the AWA vault, a survey of the vault must be made before resuming accelerator operation to ensure that no personnel is inadvertently left inside. Survey boxes are located inside each labyrinth door. The usual search-and-secure procedure is as follows: (i) All personnel with the exception of the person performing the survey will return their keys to the key tree; (ii) A labyrinth door will be locked; (iii) The person performing the survey will then press the "start survey" button located just inside that labyrinth door. At this time a klaxon will begin sounding and a rotating warning light will be activated in the vault. The person performing the survey will have 40 seconds to walk down the length of the vault to the other labyrinth, exit, and close the door. The interlock is then satisfied and "beam on" warning lights will be activated.

After the interlock is satisfied, accelerator operation requires the operator to use the control panel key to switch from "accelerator safe" to the "accelerator on" position.

In the event of accidental entrapment of personnel in the vault, a safety pull is provided, consisting of a chain strung through eyebolts located along the east side of the vault. Activation of this pull will cause a beam abort (or inhibit rf turn on in the case that beam has not yet come on) and will require that a survey be performed before beam can be accelerated.

4.2.3 Interlock system

Fig. 4.2 shows a schematic diagram of the interlock system. The circuit is based on electromechanical timer and relay technology for reasons of simplicity and reliability.

When the downstream labyrinth door is closed and locked, and all keys have been returned to the downstream key tree, relay K2 is activated. The survey of the vault is begun by pressing the downstream "Start Survey" button, which causes the TD-1 timer clutch to close and initiates the timer countdown. The upstream labyrinth door must be locked and latched, and all remaining keys returned to the upstream key tree before the end of the 40 second time-out period, or the current path through the TD-1 clutch will be interrupted and the interlock will not be made up.

Similarly, any interruption of the current path through the TD-1 clutch after the interlock is made up, such as opening a labyrinth door, removing a key from a key tree, or pulling the safety chain in the vault, will break the interlock and abort the beam.

Figure 4.3 shows a schematic of the modulator interlock system. A 45A AC magnetic contactor (MLC) is used to supply 440 V AC to the rf system. When the interlock chain is made up and various hardware protection conditions are satisfied, MLC is enabled.

In addition to the radiation safety interlock chain condition ("vault survey complete"), a second redundant condition is required to enable the modulator. A second pole of each vault key tree switch is used to provide a "vault switches in place" condition which must be satisfied independently of the main vault interlock chain.

4.2.4 External radiation monitoring

Based on the results of measurements of the radiation levels outside the vault during commissioning and initial AWA operations by Health Physics it was not considered necessary to use active radiation monitors linked to the interlock system outside the shielding. Instead, TLD badges are mounted at a number of positions exterior to the vault at beam height and at the electronics racks on top of the vault. Integrated dose are recorded quarterly. The total number of machine cycles (recorded by the operator in the facility log after each run) during the integration period allows conversion of the integrated dose to the average dose over the period of the accelerator operation.

4.2.5 Personal monitoring

Personnel performing experiment at AWA are required to wear TLD badge Based on the analysis of Section 4.2.6m it is not expected that any residual radiation will be present in the vault after the electron beam has been shut down.

4.2.6 Activation and Toxic Gas Production Hazards

The analysis in this section follows that outlined in IAEA technical report 188 and NCRP report No. 51.

4.2.6.1 Air Activation

Air activation may occur with the production of ^{13}N ($\tau_{1/2} \cong 10$ min) and $^{15}0$ ($\tau_{1/2} \cong 2$ min). In general, significant levels of activation will occur only in the presence of bremsstrahlung associated with the beam, since nuclear cross sections of photons are generally larger by two orders of magnitude compared to those of electrons.

The main sources of bremsstrahlung during AWA linac operations are:

1. Beam intercepting the walls of the beamline vacuum chamber or spectrometer vacuum chamber during tuning.

2. Beam intercepted in beamline Faraday cup diagnostics during spot measurements of beam current

From IAEA 188 Table XXXb, the saturation activity as for ^{13}N and $^{15}0$ due to bremsstrahlung in air is 14000 μCi m^{-1} kw^{-1} and 1500 μCi m^{-1} kw^{-1} respectively. The maximum beam power is 0.24 kW (400 nC, 20 MeV, 30 Hz). We also assume that the maximum bremsstrahlung path length in air is limited by local

shielding to 20 cm. We also assume a (rather generous) duty factor for bremsstrahlung production of 0.1. Taking the volume of the vault as $\cong$ 80 m^3, the saturation concentrations are found to be 0.85 x 10^{-6} μCi/cm^3 (^{13}N) and 0.92 x 10^{-6} μCi/cm^3 ($^{15}0$), both below the maximum permissible concentration of 2 x 10^{-6} μCi/cm^3. Note that we have neglected ventilation in the AWA vault which would reduce these concentrations still further. Based on the saturation activities calculated above and the dose rate factors for ^{13}N and $^{15}0$ tabulated in DOF/EH-OO70, an upper-limit submersion dose of 0.15 mRem is determined for vault entry immediately following a maximum current run. DOFJEH-OO71 does not give the corresponding committed dose equivalent factors for ^{13}N and $^{15}0$. Assuming that the CEDE value for these isotopes will not be too different from tabulated values for other light element beta emitters, we can safely take an upper limit CEDE value to be 10^{-4} Rem/μCi. This gives an upper-limit 50-year committed dose equivalent of 24 μRem for vault entry immediately following a maximum current run. Delayed entry into the vault will not be required.

We now consider offsite emissions. A flow rate of air through the vault of 1 volume/2 min (2.4 x 10^9 cm^3/hr) is maintained by a blower located above the South labyrinth door. All airflow from the vault is exhausted directly to Building 366.

Assuming a standard operating year to consist of 3080 h of operation at maximum intensity, the total activity released will be 4.24 Ci of ^{13}N and 0.46 Ci of $^{15}0$. Scaling from the results of H. Moe (APS- LS-141 Revised), the maximum possible annual offsite doses from these releases will be 1.4 x 10^{-3} mRem (^{13}N) and 0.15 x 10^{-3} mRem ($^{15}0$).

4.2.6.2 Water Activation

The AWA dump and Faraday Cups are not water cooled and there are no other situations where significant beam energy is deposited in cooling water. The cooling system for the accelerating cavities and magnets is a closed loop and is not shared by any other users in the building. Water activation will not be a hazard under these conditions (IAEA 188).

4.2.6.3 Other Materials Activation

The experimental program planned for the AWA does not include any target bombardment type experiments. Material activation problems can arise from incidental beam scraping and residual bremsstrahlung effects.

The use of materials containing elements which can be strongly activated (Zn, F, etc.) is avoided. All materials which have been inside the vault during beam runs will be surveyed by Health Physics for activation before removal from the AWA vault.

The dump will be used to absorb the full energy of the beam. The threshold for the $^{12}C(\gamma,n)^{11}C$ reaction is 18.72 MeV, only slightly lower than the beam energy, and the half life of ^{11}C is ~20 min. Based on the neutron production rate in the beam dump calculated in section 4.2.1, the saturation activation is found to be 32 mCi. Using the specific gamma ray constant found in IAEA 188 (Table XVIII), the absorbed dose index rate $\dot{D}$ T from the unshielded graphite dump is 0.59 Rh^{-1} (Ci m^2) (32 x 10^{-3}Ci) = 19 mRem $h^{-1}m^2$. In order to obtain a dose rate of 0.5 mRem/hr at 1m^2 from the dump, additional shielding must be provided, with a maximum transmission factor $B_x \cong 2.7 \times 10^{-2}$. The beam dump incorporates an 8" Pb outer shield, which is more than sufficient.

4.2.6.4 Ozone Production

The path length of electron beams through air will be limited to < 50 cm to reduce ozone production. The ozone production rate is given in NCRP 51, Appendix I as

$$\frac{dC_{O_3}}{dt} = 3.25\left(\frac{Scol^{Ix}}{V}\right) ppm/s$$

with S_{col}=3keV/cm, I=12x10^{-3}mA,

x+50 cm, and V=80x10^3l

or $$\frac{dC_{O_3}}{dt} = 7.3x10^{-6}\, ppm/s$$

Even assuming no ventilation, the time required to accumulate the TLV of 0.1 ppm is $\cong$ 4h. A ventilation rate of 1 volume/2 min will be sufficient to remain well below the TLV concentration during extended operation.

4.3 Laser

4.3.1 Laser room

Laser room safety systems are shown in Fig. 4.4. Access to the laser room is controlled to prevent accidental exposure to the laser beam. Two entrances are provided to the laser room, the primary access door (from the control room) and an emergency door. Each door is equipped with interlock switches. Appropriate warning lights are provided at the primary entrance to the laser room. Approved eyewear is required at all times for access into the laser room during laser operations.

The laser beam transport from the laser room into the vault crosses the east aisle in the laser room. The power delivered by the laser at this point is less than 150 mW, and this is incapable of causing injury to skin or presenting an ignition hazard.

The emergency exit door is not normally used. Although it can be opened at all times from inside the laser room it is locked to the outside. A key is placed in a glass case adjacent to the door should emergency ingress be needed. The interlock system will abort/inhibit laser operation anytime the emergency door is opened.

Controlled access for work in the laser room while the laser is in operation is possible. An entrance switch is located in the control room next to the laser room door. Pressing the switch permits entrance to the laser room by defeating the interlock on this door for 15 seconds. Appropriate UV absorbing eye protection is supplied for necessary work on the laser while in operation. Panic switches are provided in the laser room for emergency shutoff of laser systems.

All laser safety provisions as detailed in Section 6-2 of the ANL ES&H manual have been implemented, and written operating procedures have been developed.

4.3.2 Accelerator vault

The laser beam path to the accelerator is enclosed in a pipe to eliminate the possibility of inadvertent exposure. A mechanical shutter which can block the laser beam path at the laser room is incorporated into the interlock system.

It will be necessary during startup to access the accelerator vault with the laser shutter open and the laser on in order to perform optical alignments. To allow for this a second interlock system is provided which permits the shutter to be opened during a controlled access to the vault while preventing (via the radiation safety interlock system) rf power supply operation.

A diagram of the vault laser safety interlock system is shown in Fig. 4.2. For a laser-on controlled access, the operator will turn off the rf supply, close the laser shutter, and place the operation mode switch in the "laser only" position. When

the mode switch is in this position, the radiation safety interlock chain cannot be satisfied and the rf supply cannot be turned on.

To activate the laser access in the vault, an operator must close and lock both labyrinth doors. When the last door is closed, a warning tone is activated inside the vault and a timer begins counting down a 20 second time interval to give ample warning to all personnel in the vault. Once inside the vault, the laser shutter may be opened by placing the laser shutter key normally kept in the control room into the shutter key switch turning it on. This in turn opens the shutter and activates the "laser on" warning lights located in the vault and outside the labyrinth entrances. Note that the vault door remains locked in this mode. Entrance into the vault during the "laser on" mode can only be made from the labyrinth at the north end of the vault. An entrance switch must be pressed that will temporarily unlock the labyrinth door for 20 seconds. The door must be securely closed after entry within this time or the mechanical shutter will block the laser path into the vault.

When the necessary work in the vault is completed, the mechanical switch is manually closed and the laser key is removed from the key switch. This cuts all laser entry into the vault. Both labyrinth doors can now be opened and the vault can be safely accessed again. The operation mode switch on the control panel in the control room can now be moved back to "beam" mode.

Detailed procedures are found in the "Laser Safety System Procedures" document.

4.4 Rf power system safety

4.4.1 Microwave

The microwave system of the AWA experiment consists of pulsed and cw signals at 1300 MHz and 40.625 MHz. As explained in the following paragraphs, calculations show that the AWA experiment will have background rf levels several orders of magnitude below the limit set by ANSI standards. Upon commissioning of the experiment, these levels will be measured to ensure compliance with all safety standards. Operating procedures for the AWA rf system are found in RF System Operating Procedures document.

The ANSI standard (C.95.1-1991) for background rf levels at 1300 MHz requires the power density to be less than 5 mW/cm^2 one meter from the source.

Measurements by Health Physics during rf system checkout have determined that background levels of If at 1300 MHz are far below the ANSI limit.

Since the waveguides which distribute the rf power from the klystron are pressurized with SF_6, and pressure switches connected to the interlock system monitor the pressure, there is no risk of high power rf being released due to unexpected openings in the waveguides. Any failure in the integrity of the waveguides would cause a leak of SF_6, tripping the interlock chain.

ANL industrial hygiene personnel have measured rf leakage from the entire rf system during the commissioning process and after any system modifications to ensure that background levels are below the ANSI standard limits.

4.4.2 X-ray

The primary source of potential x-ray emissions from the rf system is the klystron anode. The entire klystron is enclosed in a lead shield specified to reduce emissions below standard levels (ANSI N43.2-1977). The weight of the lead shielding makes accidental removal unlikely.

X-ray emission from high-power rf waveguides is a concern only when evacuated waveguides are used. The AWA will use SF_6-filled waveguides, from which x-ray emissions are negligible. No provision for evacuating the guides is provided.
-

ANL health physics will monitor any x-ray emissions from all rf system components during commissioning and after any modifications.

4.4.3 Electric shock

The rf power supply is the principal source of electric shock hazards at the AWA. Normally the breaker on the 44OV line supplying the system will be locked out during maintenance on the supply. Both the HV and AC cabinet doors are interlocked to the PFN dump switch and capacitor dump switches to abort supply operations in the case of an accidental access. Grounding hooks are supplied to discharge the high voltage capacitors and other components before work on the supply is initiated. A schematic of the rf supply safety chain is found in Fig. 4.3.

Under certain circumstances, access to the rf cabinet may be required while the supply is on. In this case, troubleshooting hot rules apply (ANL ES&H Manual Chapter 9-1). A troubleshooting hot procedure and log will be established.

4.4.4 RF Waveguide Transfer Procedures

There are additional waveguides which can bring rf power into the AWA vault. Occasionally these are used to power other rf cavities installed in the vault. Some of these cavities are simply tested for their rf properties at high power levels, other ones (rf guns) may generate an electron beam. In either case, the radiation levels produced, and the possible electron beam generated, do not exceed the levels produced by the main AWA beam.

In order to bring rf power through these additional waveguide sections, it is necessary to re-route some of the waveguide connections on the roof of the vault.

The re-routing of the rf power is accomplished by reversing a waveguide elbow in one feed line and substituting one elbow for another in the second feed line. Switching from one system to the other must be scheduled such that the switch does not disrupt ongoing experiments using the system currently connected. In addition, due to the high level of rf power in the system, the system must be secured to prevent injury to personnel and/or damage to the equipment. The absence of rf leakage from these joints was verified by ANL Industrial Hygiene.

The pressure switches that monitor the SF_6 pressure in the waveguides, being part of the rf interlock system, would prevent the klystron from generating rf power if any waveguide connection is undone. As an extra precaution, the person executing the rf power re-routing must lockout the high voltage disconnect and retain the key until the waveguides are re-connected.

4.5 Other safety systems

4.5.1 Fire

Fig. 4.1 shows the locations of smoke sensors and sprinklers. Sprinkler systems are located in the AWA vault, control room, and laser room. There are only limited amounts of combustibles in the AWA. Smoking is not permitted anywhere in the AWA facility and in Building 366.

4.5.2 Toxic chemicals/gases

The laser gas ventilation system is shown in Fig. 4.5. The gas cabinet and exhaust gases from the excimer laser are vented to the outside by a continuously operating forced air system. A flow-sensing switch is installed in the ventilation duct and connected both to an indicator light and sound alert. Vent system operation will be checked as part of the laser start up procedure. Halogen traps located in the excimer laser purge lines will reduce the Fluorine content in the gases to safe levels. Traps will be replaced periodically as specified in the laser operating procedures.

4.6 Accident Analysis

This section discusses the possibility of accidents at the AWA involving radiation overexposure and electric shock. Minor hazards (ozone, laser, microwaves) and hazards generic to the ANL environment (tornado, earthquake, fire, crane, gas cylinder, etc.) are not considered here. The analysis leads to a definition of the maximum credible accident scenario for the AWA.

4.6.1 Failure Modes for the Interlock System

4.6.1.1 Relays

The normal failure mode for a relay is an open coil, in which case the interlock cannot be satisfied. An unusual failure mode is a welded contact. The system is fused, and the current through the relay contacts is the minimum necessary. No large inductive loads are present in the system to produce high instantaneous currents. Thus welding of contacts is unlikely.

4.6.1.2 Switches

The interlock chain uses highly reliable industrial grade switches specified to pass much more current than system fuses will allow. Failure from welded contacts is unlikely.

4.6.1.3 Wiring

Any break in the system wiring will not permit the interlock to be satisfied. A short between incoming and outgoing lines could cause a false indication that the interlock chain was satisfied. All wires are enclosed in grounded conduit, so a crushing accident is unlikely. If crushing did occur, the conduit would contact the wire and the ground fault detection circuit would disable the interlock. Similarly a shard causing a short between the two wires would also most likely contact the conduit or junction box, causing a ground fault condition.

4.6.1.4 Monitors

4.6.2 Accident Scenarios

4.6.2.1 Personnel in Vault with Beam/rf On

The vault survey procedure requires a walkthrough of the entire vault (including both labyrinths) before the radiation interlock can be satisfied. Procedure also requires each person entering the vault to have in their possession a key from the key tree, which prevents the radiation interlock from being satisfied. The safety pull is within easy reach anywhere inside the vault

Any entry to the vault with the accelerator on will break both the laser and radiation interlocks. The interlock system will never be used to shut off the accelerator under normal circumstances.

The safeguards provided by the interlock system are sufficient to ensure that accidents involving personnel inside the vault with beam or rf on are not likely.

4.6.2.2 Excess Radiation Outside Vault

Given the safety margin inherent in the vault shielding, this is not expected to be a likely occurrence.

4.6.2.3 Electric Shock

Accidental entry to the rf power supply cabinet is unlikely, since the cabinet doors will be locked with the key under control of the run captain. Entry to either cabinet during operation will break the interlock chain.

shutting off the 440 VAC and in addition activating the PFN and capacitor dump switches.

For routine maintenance the supply will be powered off and the person making the access must ensure that the PFN and other identified high voltage points are discharged by using the grounding hooks located inside the cabinets.

Warning signs are posted inside the cabinet. If it becomes necessary to work hot inside the rf cabinet (not anticipated at this time) working hot procedures exist to permit this to be done safely.

Electric shock accidents can result only from circumvention of procedures by personnel.

4.6.3 Maximum Credible Accident

Based on the previous analysis, accidents involving radiation overexposure are not credible at the AWA. The radiation MCI described in 4.2.1 and Appendix I provides a maximum dose of 0.56 rem for a one hour exposure. The maximum credible accident is electric shock from the rf power supply during installation or maintenance if proper procedures are not followed.

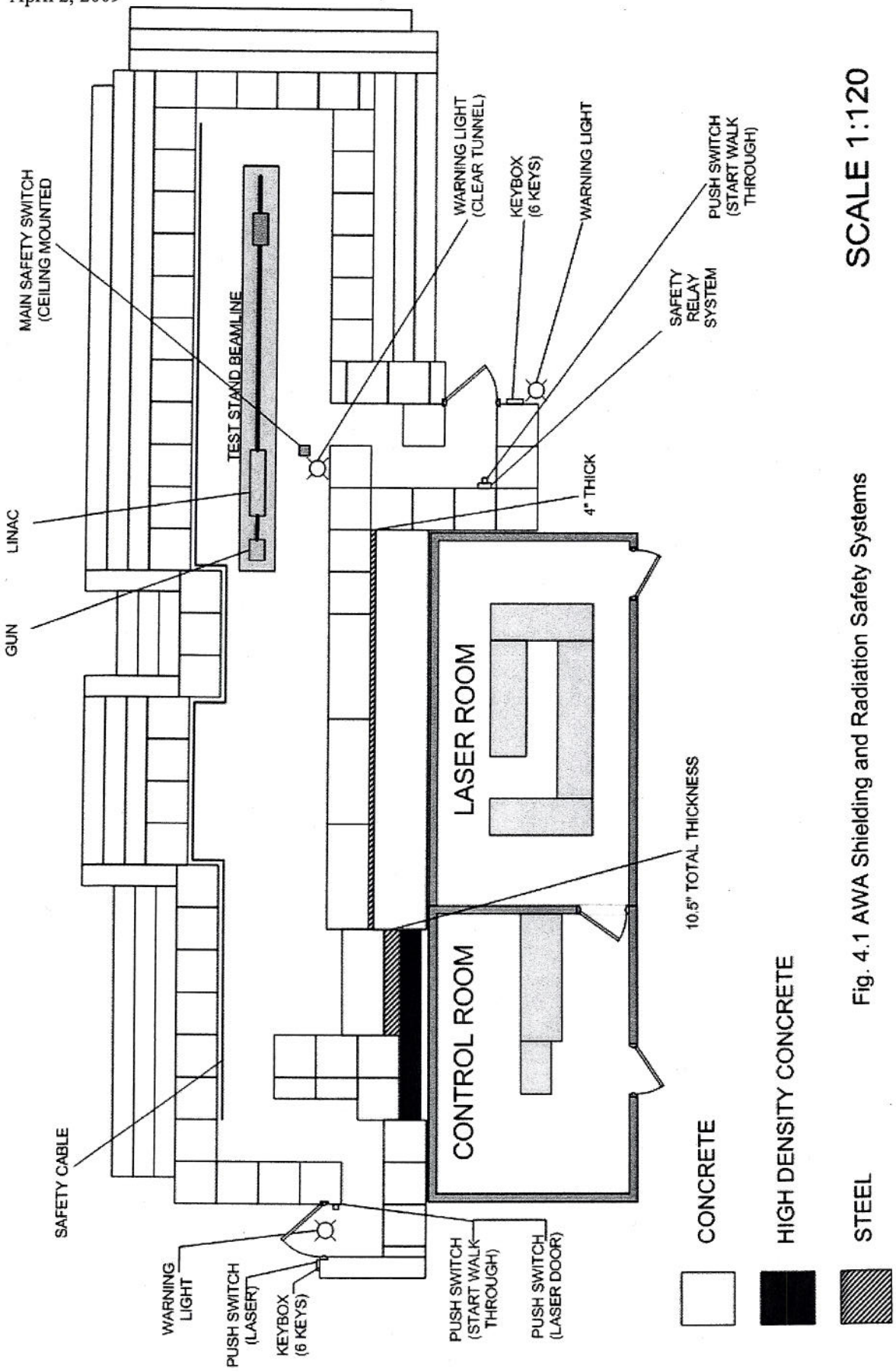

SCALE 1:120

Fig. 4.1 AWA Shielding and Radiation Safety Systems

Fig. 4.2

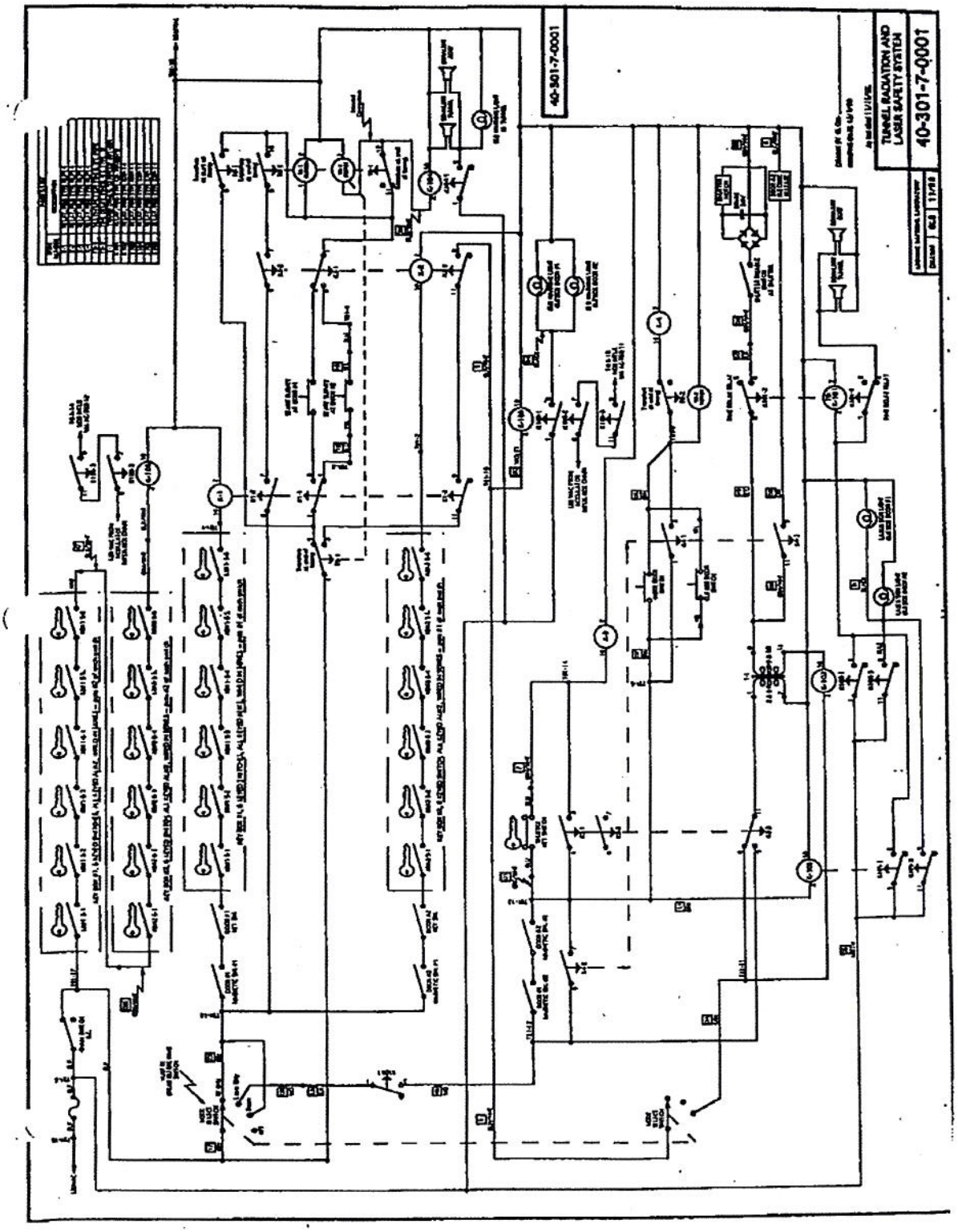
40-301-7-0001
TUNNEL RADIATION AND LASER SAFETY SYSTEM
40-301-7-0001

Fig. 4.3

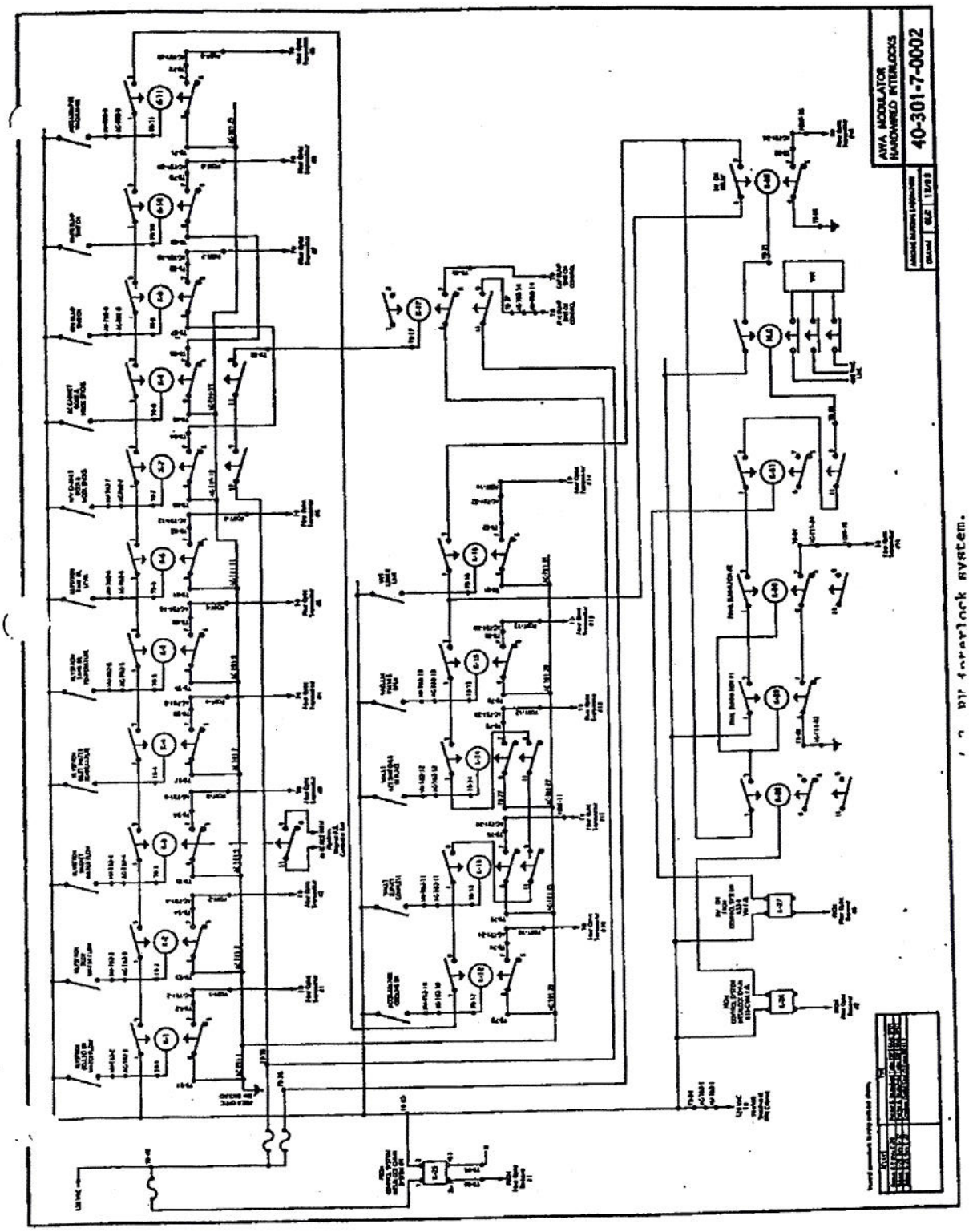

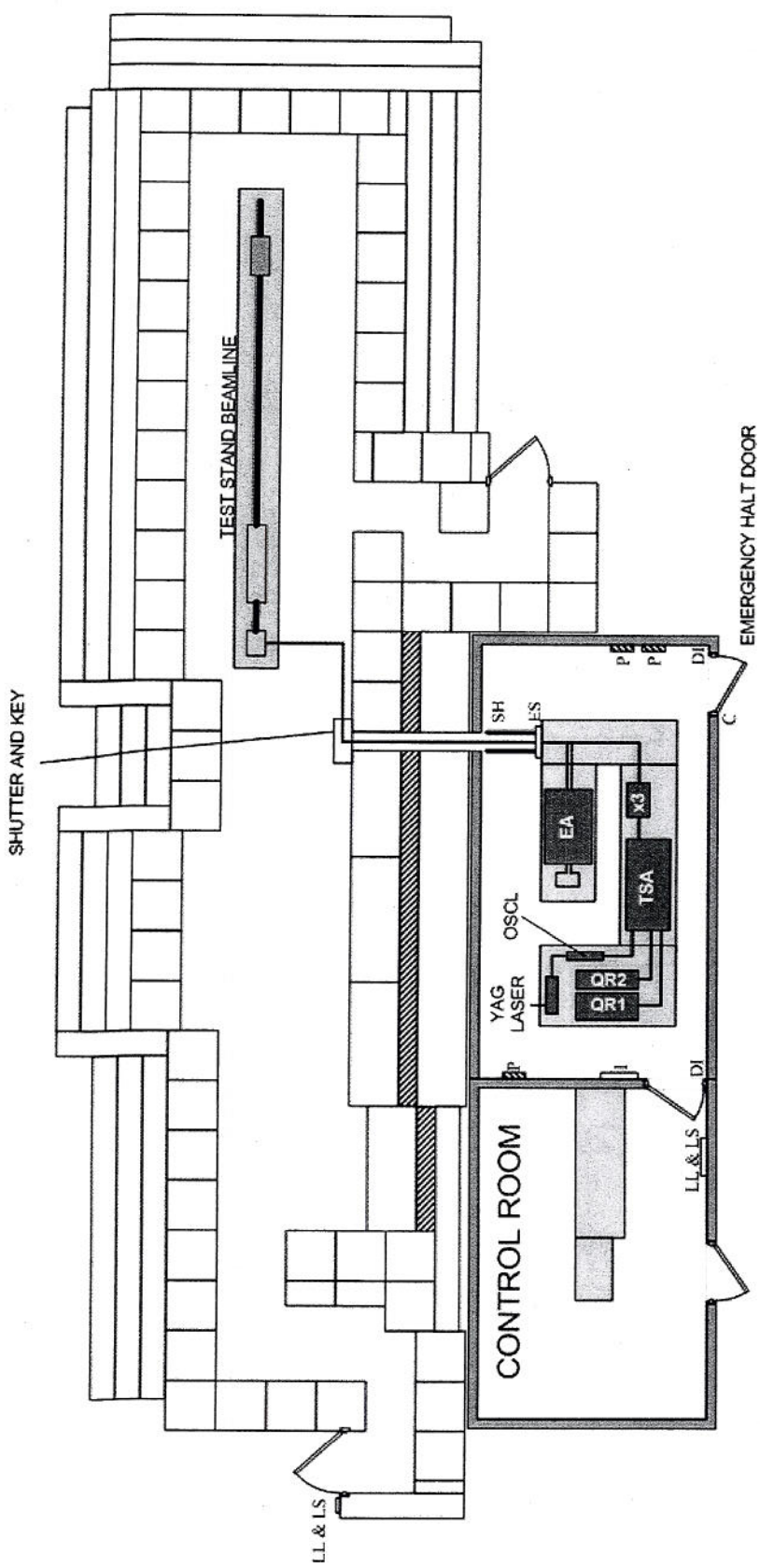

ES - Emergency Shutter
I - Laser Safety Box. It Connects To DI and Panic Switches. Also Has Panic Buttons.
C - Door Cover To Prevent Visual Access Into The LCA.
QR1 - QuantaRay 1
QR2 - QuantaRay 2
TSA - Ti-Sapphire Amplifier
x3 - Tripler
EA - KrF Excimer Amplifier

LASER SYSTEM

LL - Laser Warning System
LS - Laser Hazard Warning Sign Meeting ANZI Requirement
DI - Door Interlock
P - Panic Switches
SH - Laser Beam Enclosures
OSCL - Oscillator

NOTE: Only the inner shielding layer is shown. Fig. 4.1 shows the full shielding configuration

SCALE 1:120

Fig. 4.4 Laser Safety System

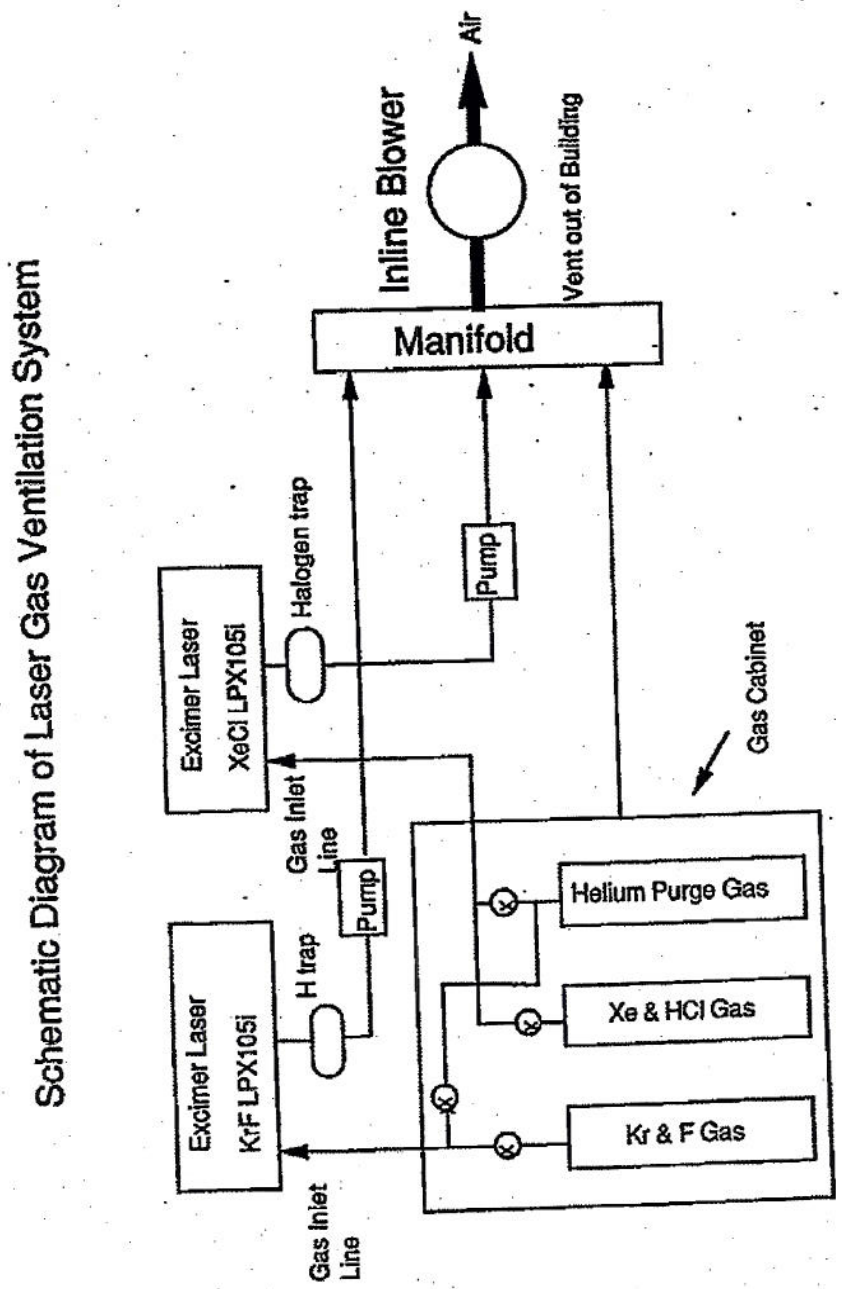

4.5 Laser gas ventilation system.

5. Safety Envelope

The calculations presented in Appendix I show that the radiation shielding provided for the AWA vault is adequate even when operating the drive linac at its nominal maximum possible intensity, energy, and rep rate (20 MeV, 400 nC, 30 pps). In reality, the AWA klystron, rf gun and linac, and also the laser system are not capable of providing the necessary parameter values to reach the nominal maximum intensity, energy and rep rate. The actual limits are approximately 15 MeV, 150 nC and 10 pps. Nevertheless, the ASE and the entire risk analysis use the nominal maximum parameters as the maximum operating condition. This certainly provides an extra safety margin to the facility.

5.1 Limits on the beam energy, intensity and rep rate

The AWA beam energy is limited by the amount of rf power available from the klystron and the shunt impedance of the rf cavities. The klystron and rf cavities presently available at AWA limit the beam energy to a maximum of approximately 15 MeV.

The intensity of the beam, or the total charge accelerated during an rf pulse is limited by the amount of charge generated at the photocathode. With the present photocathode material (Magnesium) and the maximum available laser energy per pulse of 15 mJ, a maximum charge of approximately 150 nC can be generated during each rf pulse.

The laser system can run at a maximum repetition rate of 10 pps. This limit is set by the manufacturer and cannot be exceeded.

6. Miscellaneous Issues

6.1. Quality Assurance

The quality assurance plan for the AWA has been incorporated into the **HEP** Division plan.

6.2 Environmental Monitoring

As described in section 4.2.6, we expect no significant transport of activated air or water outside of the AWA vault during operations. Radiation levels outside the vault will be monitored continuously during AWA operations (section 4.2.4).

6.3 Decommissioning and Decontamination

As per section 4.2.6, we expect no long term activation of any AWA components. During decommissioning, the usual Health Physics survey procedures will be followed on any components removed from the AWA vault.

APPENDIX I - SHIELDING ANALYSIS FOR THE AWA

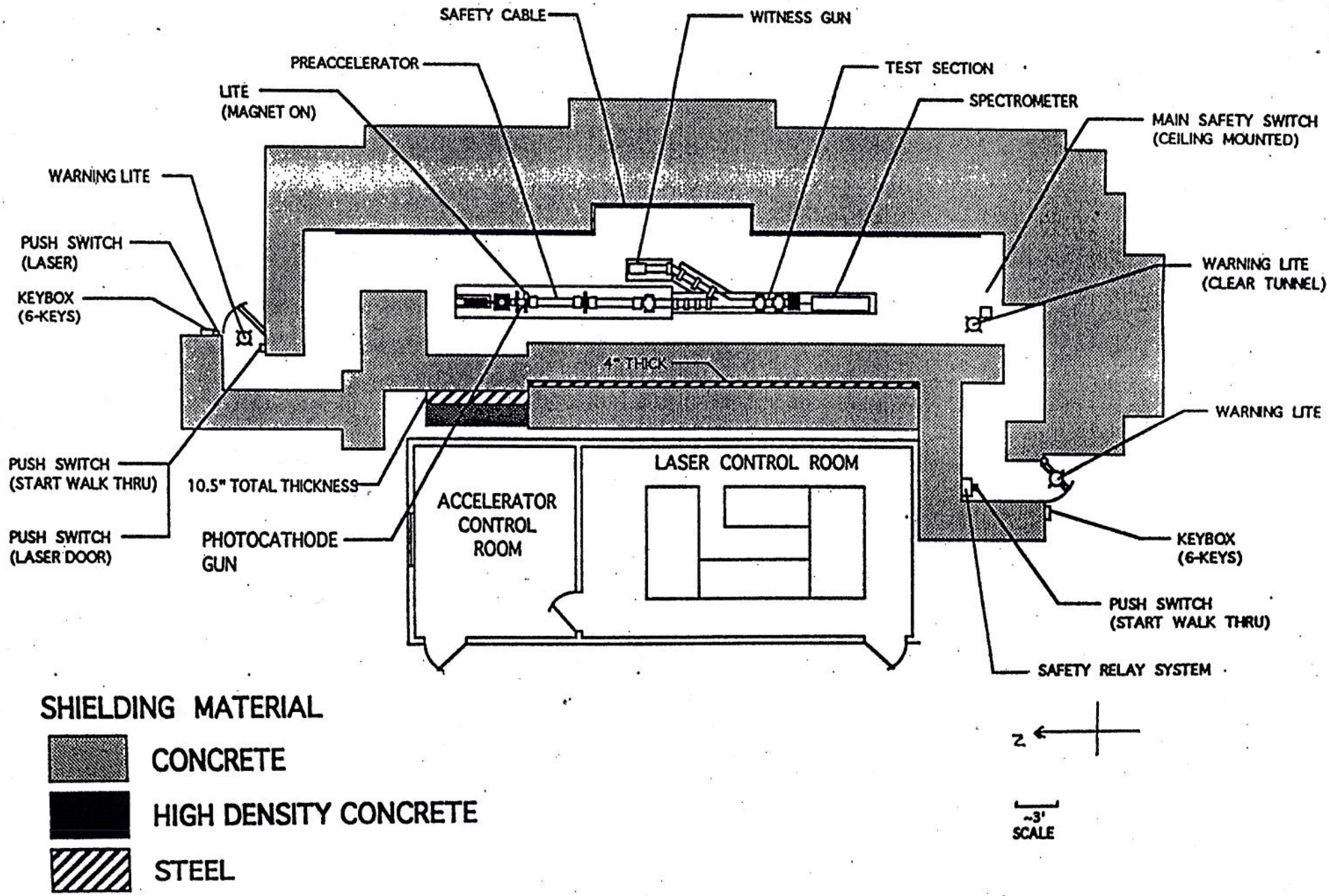

Fig. 1. AWA SHIELDING AND RADIATION SAFETY SYSTEMS

ARGONNE NATIONAL LABORATORY
9700 South Cass Avenue, Argonne, Illinois 60439

(708) 252-6174
INTERNET: djj@hep.anl.gov

October 2, 1995

To: J. D. Simpson HEP

From: D. J. Jankowski DJJ HEP Safety Coordinator

Subject: *Post Modification Safety Inspection of the AWA*

Reference: *Memo from J. D. Simpson to D. Jankowski, August 29, 1995; Subject: Post Modification Safety Inspection of the AWA*

Participants: Chuck Jonah (CHM), T. Barkalow (ESH), Marsha Torres (ESH-HEP), Sig Nelson (ESH-ENG), Ivars Ambats (HEP), George Cox (HEP), Jim Simpson (HEP), D. Jankowski (HEP)

A safety review committee was assembled to look over modifications made to the AWA. There were three principal parts of the AWA that were modified. They were (1) the extension of the accelerator tunnel; this was brought about to accommodate experiments for a group at Fermilab, (2) expansion of the control room, and (3) extension and scheme for alternately switching the microwave waveguides between the newly planned Fermilab experiment and the AWA.

The findings of the safety review are as follows:

I. *Extension of Accelerator Tunnel*

a. The cable try mounted on the east wall had other cable trays stacked on top of them. The non-mounted cable trays should either be mounted or placed into storage until needed. The stacked unmounted cable trays were also masking the emergency lighting.

b. The AWA emergency shutdown pull cable was extended into the new tunnel section; this should be dynamically tested before startup.

c. The fire protection sprinklers were not completely installed; the completion is expected in early October. When the sprinkler system is completed, it should be tested and approved by the ANL Fire inspectors.

d. Plumbing for cooling water has been installed and valved off. This should be hydraulically tested before use.

e. All new power duplexes should be tested for proper wiring.

f. A plug is needed to cover a hole in a ceiling 115V duplex box.

II. *Extension of Control Room*

a. Check for proper wiring of 115V wall duplexes.

III. *Alternately Switching Scheme of Waveguide between AWA and the Fermilab Experiment*

a. This modification is of a specialized nature and will be checked out at the time when the klystron is energized. I'm told G. Myers (ESH-IH) will be called in to monitor for RF leakage when the waveguides are energized.

Penetrations into the roof for the entry of the new waveguide system for the Fermilab experiment are in the process of being filled with lead shot. The integrity of this shielding will be checked with an Ion Chamber and TLD's at the time the AWA is brought back on line. Field modifications should be made if any radiation is detected.

The Safety Analysis Document for the AWA should reflect the modified configuration of the facility. There should be a note or equivalent statements indicating that there have been NO SAFETY ENVELOPE change resulting from the above three modifications to the AWA.

Calculations for the radiation shielding and space modifications were performed by the HEP-AWA Group. All calculations were validated and approved by the ANL HP Group. These modifications will allow the AWA to operate in a non-controlled external area. Figures 1 and 2 (attached) show the AWA tunnel before and after modification.

It was noted that all relay racks for the future Fermilab experiments will be installed on the roof of the new tunnel extension; these relay racks should be externally grounded. Installation of equipment on the new tunnel roof was in progress; cables were laying across the roof. This Committee realizes that the installation and testing of equipment is in progress and expects that all cables will be placed in cable trays or equivalent troughs before operation of the AWA resumes.

We suggest that there should not be more than one person working on adjustments of the laser system at any time; this should be reflected in the Laser Operating Procedures manual.

This Committee will approve the resumption of the AWA running when the above deficiencies and documentation have been corrected.

DJJ:sak

Attachments

xc: AWA Group
Inspection Participants
S. Morss (OTD/PR)
L. Price (HEP)

ARGONNE
NATIONAL
LABORATORY

INTRA-LABORATORY MEMO

March 7, 1993

To : Paul Schoessow HEP
Jim Simpson HEP

From : V. Rao Veluri VRVeluri ESH/HP

Sub : Argonne Wakefield Accelerator (AWA) Shielding Analysis Summary

Please find enclosed the shielding analysis for the Argonne Wakefield Accelerator (AWA) vault.

The present document is a consolidated summary of the technical material presented in several memos and drafts, pertaining to the changes that were proposed to the first shielding analysis draft document dated August 30, 1993.

If you have any further questions, please do not hesitate to call me directly at 2-4252 or page me at 4-1993 or leave an e:mail message at rveluri@anl.gov.

cc: H. S. Morss
M. J. Robinet
R. A. Schlenker
Marcia Torres
R. A. Wynveen

Argonne Wakefield Accelerator (AWA) Shielding Analysis

V. Rao Veluri

(March 5, 1994)

1. General Introduction

A number of intra-laboratory memos analyzing the shielding design, reviews of proposed changes to the shielding, and dose rate evaluation drafts were prepared and exchanged with the Argonne Wakefield Accelerator (AWA) personnel (Ref. 1). The following presents a consolidated summary of the analysis of presently as-built shielding for the Argonne Wakefield Accelerator (AWA). In addition, dose estimate for a hypothetical "maximal credible accident" scenario as required by the DOE 5480.25 Guidance Document (Ref. 2) was added to this summary.

The shielding for AWA has been designed to meet the DOE 5480.11 (Ref. 3) criterion that the occupational dose rate at the nearest freely accessible point out side the shield be less than or equal to 0.5 mrem/h from all radiations during normal and continuous operation of the accelerator. For an electron linac operating at 100 MeV or less , the two radiations that contribute to the doses outside the shielding are bremsstrahlung and fast neutrons produced by the photonuclear interactions. These neutrons, in general have an effective energy of 2 MeV. The bremsstrahlung intensity is highly peaked in the forward direction, yet the transverse component contributes substantially to the dose. The neutrons, also referred to as the giant resonance neutrons, are emitted isotropically.

2. AWA Physical Parameters

The following parameters were used for the shielding estimates.

E = 20 MeV
Iave(Max) = 12μA (400 nC @ 30 pps)
Total Beam Power = 240W
Beam Height from the floor = 3.5 Ft.
Linac Tunnel Internal Dimensions :
Length 51' (15.54 m) Width 7.8 Ft. Height 7.5 Ft.
Closest distances to shield wall from beam line:
West side 3.0 Ft. East side 4.8 Ft.

For the purpose of this shield design analysis, the electron gun end is designated as the north end, thus making the control room side as the west side(see Figure 1).

3. Estimated Beam Losses

Shielding computations were based on point losses in which a fraction of the beam power was assumed to be lost in the components of the accelerator. For the electron gun, this loss was assumed to be 50%, so that the current lost was equal to the average current and the energy was taken as 100 keV. This amounts to a power loss of 0.3 W.
For the linac, a 10% loss was assumed to occur at a point along the accelerator with an average energy of 10 MeV, corresponding to a loss of 12 W for a 240 W beam.

4. Bulk Shielding Formulation & Parameters

The general equation to compute the bulk shielding for point losses in various components of the system is conveniently written in terms of the total dose equivalent rate, energy loss, shield thickness and distance to the dose point. The equation used is as follows:

$$\dot{H}_{tot} = \frac{\sum_i F_i W \prod_{i,j} e^{-d_j/\lambda_{i,j}}}{r^2}$$

where,

$\dot{H}$ = Total dose equivalent rate in mrem/h,
F_i = Dose equivalent conversion factor for the i th component of radiation (bremsstrahlung or fast neutrons) in units of mrem - m^2 /J,
r = Distance between the source and the dose point in meters,
d_j = Thickness of the shield in g/cm^2,
$\lambda_{i,j}$ = Attenuation length in the j th shield material for the i th component of radiation in units of g/cm^2
W = energy loss rate in J/h.

The summation is taken over all of the relevant types of radiations.

All the parametric data such as the dose equivalent conversion factors, the attenuation lengths for various shield materials were taken from NCRP 51(Ref. 4), IAEA 188(Ref. 5) and Tesch 79 (Ref. 6). In some cases these data were cast in a slightly modified form for ease of computation. The unshielded dose equivalent conversion factors (F_i), and the attenuation lengths (λ_i) are listed below.

Radiation Component		Dose equivalent conversion factors (mrem-m^2 /J)	
Bremsstrahlung	Forward Component	166	(High Z materials)
		83	(Low Z and Concrete)
	Transverse Component	1.67	for all Z
Fast Neutrons	Isotropic	0.63	

(The fast neutron conversion factor assumes that 2.52 E04 n/sq. cm = 1 mrem)

Density & Attenuation Lengths

		Attenuation Lengths λi (g/cm^2)	
Shield Material	Density (g/cm^3)	Bremsstrahlung	Fast Neutrons
Concrete (ordinary)	2.35	47	37
Lead	11.34	26	161*
Steel	7.8	37	127
Steel	7.8	37	100*
Dense Polyethylene	1.01	70	6.3

* only if backed by hydrogenous material such as concrete.

In the case of electron gun shielding, the dose equivalent conversion factor and the attenuation length were extrapolated from the NCRP 51 data for the bremsstrahlung radiation. Since the energy of the electrons is only of the order of 0.1 MeV, neutrons need not be considered. The dose equivalent conversion factor is 2.1E-02 mrem-m^2/J. The attenuation length in concrete is estimated to be 5.2 g/cm^2. Both these parameters are extrapolations from graphically presented data and as such are very approximate.

5.0 Bulk Shielding Calculations

5.1 Electron Gun:

For the electron gun with a concrete shield of 4.5 feet thick behind it, and the closest dose point at a distance of 12.0 feet, the estimated dose rate would be approximately 8.0 E -27 mrem/h, which is negligible. Although the shielding installed behind the gun is more than adequate, as the above estimate shows, the backward directed bremsstrahlung radiation from the losses in the linac would contribute a much higher level to the radiation dose at the dose point in question. This increased level dictates the amount of shielding needed behind the gun.

NCRP 51 suggests that the backward directed radiation component may be of the same order as the transverse emission. Assuming the dose point close to the maze door with a total concrete shield thickness of 7.5 feet, the dose rate due to bremsstrahlung and neutrons would compute to 6.4E-03 mrem/h.

5.2 Linac Tunnel

'EAST' side: A 12 W power loss in a 240 W beam is assumed for the shielding design of the tunnel. The dose point on the east side is at a distance of 13.8 feet with a concrete shielding of 7.5 feet (See Figure 1). The total computed dose equivalent rate outside the shield due to bremsstrahlung and neutrons would be 6.01E-02 mrem/h.

'WEST' side: For the 'WEST' side wall, a 6.0-foot thick concrete wall and a 4-inch steel plate were installed along the entire length of the wall on the high energy side of the linac. Toward the gun side, i.e., the low energy end of the linac, due to space constraints, a 3-foot ordinary concrete, a 10.5-inch thick steel plate, and abutting the steel plate an additional 1.5-foot thick high density (3.76g/cc) concrete wall were installed (Figure 1).

The computed dose rate due to all radiations at a dose point where a total of 6 feet of concrete and 4 inches of steel were installed would be 0.13 mrem/h. Toward the gun end where 10.5 inches of steel abuts 1.5 feet of heavy concrete, the dose rate due to all radiations would be 0.03 mrem/h. In either case, the estimated dose rates with the present shield configuration would be not only well within the DOE criterion cited above, but would be within the ALARA guidance suggested in the DOE Radiological Control Manual (Ref. 7).

5.3 Scattered Radiation

The situation for the inclusion of the scattered radiation arises from the fact that the radiation directed skyward is 'reflected' back from the atmosphere. This reflected component increases the level of radiation in the immediate vicinity of the facility. This component is termed as 'skyshine'. One more reflected component of concern is the scatter that occurs down the passage way or mazes. Both these components were treated using the methodology presented in the NCRP 51.

To compute the contribution due to skyshine, a roof shielding of 3' concrete is assumed to be in place. An albedo factor α of 1.0 E-03 is conservatively assumed. The dose rate due to the reflected radiation is given by

$$\dot{H}_I = \dot{D}_{IO}\, \alpha\, A / d_1^2\, d_r^2$$

where $\dot{D}_{IO}$ is the unshielded dose index rate in mrem-m^2/h at 1 m from the source. In this case since the quality factor for the x - rays is unity, $\dot{D}_{IO} = \dot{H}_{IO}$. The symbol A (m^2) is

the area of the beam at a distance of d_1(m) at which it strikes the air layer and d_r (m) is measured from the center of the scattered area to the dose point. The solid angle Ω is estimated from a chart given in Spencer 80 (Ref. 8). This chart allows one to compute the solid angle in terms of the length and width of the opening and the altitude above the source. Making the assumption that A/d_1^2 is approximately equal to the solid angle, the dose equivalent rate from the reflected bremsstrahlung was computed to be about 0.05 mrem/h.

For the dose component due to the skyshine neutrons, the flux density of the scattered neutrons need to be estimated. The following equation from NCRP 51 is used to estimate the scattered neutron flux density.

$$\phi_s = 5.4 \times 10^{-4} \; (\phi_0 \Omega \, e^{-d/\lambda}) / 2\pi$$

where, ϕ_0 is the flux density at 1 m. Using the neutron yield factor of 2 E+07 n/ s kW as suggested by Swanson (Ref.) for a graphite target. The skyshine neutron dose rate was computed to be 1.8E-07 mrem/h. Thus the total skyshine dose rate would be approximately equal to 0.052 mrem/h.

5.4 Maze Design

The equation used to calculate the dose rate due to scattered photon radiation field on the outside of the maze configuration is given by (NCRP 51)

$$\dot{H}_x = \frac{\dot{D}_0 \alpha_1 A_1 (\alpha_2 A_2)^{j-1}}{(d_1 \cdot d_{r1} \cdot d_{r2} \cdots d_{rj})^2}$$

in which $\dot{D}_0$ is the dose equivalent index rate at 1 m, α_1 is the albedo for normal incidence on concrete, 1.4×10^{-3}, A_1 is the area of the beam at the reflecting surface assumed to be 3.345 m^2 (6 ft. x 6 ft.), d_1 is the distance from the target to the initial reflecting surface and d_{rj} are the centerline distances along the length of the maze sections. The bremsstrahlung dose rate is computed to be about 3.6E-02 mrem/h.

For the neutron component, after the second leg one may assume that only thermal neutrons dominate the field. Using a reflection coefficient of 3.3×10^{-2}, the reflected flux density entering the second leg of the maze is calculated from the equation

$$\phi_s = \phi_0 A_1 / d_1^2$$

The second leg of the maze acts as the entrance to the three- legged maze. Using the methodology suggested in the NCRP 51 to estimate the transmission factor for thermal neutrons in terms of the total maze dimensions, the dose equivalent rate is calculated from the equation

$$\dot{H}_m = \phi_m B_{nm} / 270$$

where, 270 n/s.cm^2 is equal to 1 mrem/h. The estimated neutron dose equivalent rate for a low Z target such as graphite near the spectrometer (see Figure 1) would compute to be 3.6 E-06 mrem/h.

5.5 Test Area & Forward Beam

At the end of the test area (spectrometer) with carbon (7 inches) surrounded by lead (at least equivalent to 4 inches) epoxy and borax mix was assumed to be the beam dump for this dose analysis. The south side shielding consists of 9 feet of concrete. Assuming the entire beam with full power is deposited in the dump, the bremsstrahlung dose rate for the forward component is estimated to be 0.02 mrem/h. For the neutrons, even if one assumes the high Z dose equivalent conversion factor, the dose rate would compute to be 1.7E-04 mrem/h. The total dose rate, just outside the shield on the south side would be about 0.02 mrem/h, for normal operations at full power.

5.6 Ozone Production

The expression given in NCRP 51 for the ozone production rate per minute is as follows:

$$C_{O3} = 3.25\ S\ I\ X\ t\ /V \text{ ppm/min}$$

where, S is the collision stopping power in air for 20 MeV electron beam (2.7 keV/cm), I is the beam current in mA (0.012 mA), X is the distance the beam travels in air in cm (assumed to be about 300 cm), V is the volume of the room in liters containing the external electron beam (8 ft. x 8 ft. x 50 ft. = 9.1 E 04 l) and t is the irradiation time given in seconds (60 s).

We calculate the Ozone concentration rate as 2.08E-02 ppm/min, which is well below the threshold limit value of 0.1 ppm. Ozone dissociates with a 50 min half life. Assuming a ventilation rate of 2 air exchanges per minute and a correction factor, k (0.1) for the lack of perfect mixing the rate equation is written and solved for equilibrium concentration for a continued operation. This is approximately equal to 0.096 ppm, indicating no additional precautions are necessary to enter the tunnel after shut down.

6.0 "Maximal Credible Accident" Scenario Doses:

This analysis is intended to determine the hazard category as required by the DOE Order 5480.25 using the Guidance Document of September 1, 1993. The calculations were made
for full power of the accelerator at the weakest part of the shielding with the dose point chosen to be closest possible outside the secured area. In consultation with the Argonne Wakefield Accelerator personnel, the most probable scenario for of beam loss was determined.

The vertical bend magnet (spectrometer area) is assumed to fail and the entire electron beam gets transported to the 'SOUTH' wall through the thin quartz lens of the spectrometer. The south side shielding, in the forward direction consists of a 9-foot concrete wall. This becomes the target, a low Z target, for this hypothetical analysis.

Dose conversion factors were taken from NCRP 51. The bremsstrahlung dose on the outside of the south wall due to the forward component was estimated to be 0.15 mrem per one hour. Similarly, the bremsstrahlung dose in the 90-degree direction, just outside the closed access door on the south side was computed to be 0.56 rem per one hour. In both the cases, the errant beam was assumed to be impinging on the south wall at full power. Since the 'target' (concrete) is a low Z target, the neutron production rate for a 20 MeV beam is at least four orders of magnitude lower than for the high Z targets such as lead. Even if one assumes a dose conversion factor that is valid only for high Z targets, the estimated dose due to neutrons would be about 2 E-04 mrem per one hour due to the errant beam.

The total dose due to this hypothetical "maximal credible accident" is estimated to be about 0.6 rem per one hour, which is below the low hazard category occupational dose of 25 rem. The AWA vault is approximately 500 m from the perimeter of the site, and hence the accidental dose at a point outside the perimeter would be about 2.5 E-03 mrem during the one hour of the errant beam.

7.0 Summary

The Argonne Wakefield Accelerator shielding has been designed such that in the normal operating conditions with full power or under "maximal credible accident" conditions, the dose rates outside the shielding due to all radiation components fall well within the DOE accepted guidelines. All the dose estimates were made assuming a low Z target such as graphite. However, even a medium Z target such as copper is used, it is found that the dose rates outside the shielding would be within the DOE design goal.