Subpicosecond Double Electron Bunch Generation

W. D. Kimura

Advanced Accelerator Concepts Workshop
Jul. 10-15, 2006

Work supported by the U.S. Department of Energy, Grant Nos. DE-FG02-04ER41294, DE-AC02-98CH10886, and DE-FG03-92ER40695

Collaborators

- Brookhaven National Laboratory (Accelerator Test Facility)
  - Marcus Babzien
  - Karl Kusche
  - Igor Pavlishin
  - Igor Pogorelsky
  - Daniil Stolyarov
  - Vitaly Yakimenko
- University of California, Los Angeles
  - Feng Zhou (now at SLAC)
  - Xiaoping Ding

Background

- Chicane/compressor installed downstream of linac acceleration sections
  - Designed by UCLA (see R. Agustsson, UCLA, M.S. thesis, 2004)
  - Intended to provide compression ratio of ~30x
- Compressed *e*-beam useful for different applications
  - Provide high peak current to drive devices (FEL, SASE)
  - Drive plasma wakefields for laser acceleration experiments
- STELLA-LW experiment testing new laser wakefield acceleration (LWFA) scheme called seeded self-modulated LWFA
  - Use short-pulse electron bunch to act as seed to generate wakefield in plasma
  - Use high-power CO_2 laser pulse to amplify wakefield
  - Probe amplified wakefield using second “witness” electron bunch

STELLA Staged Electron Laser Acceleration

STI OPTRONICS

UCLA Chicane[1] Installed at ATF

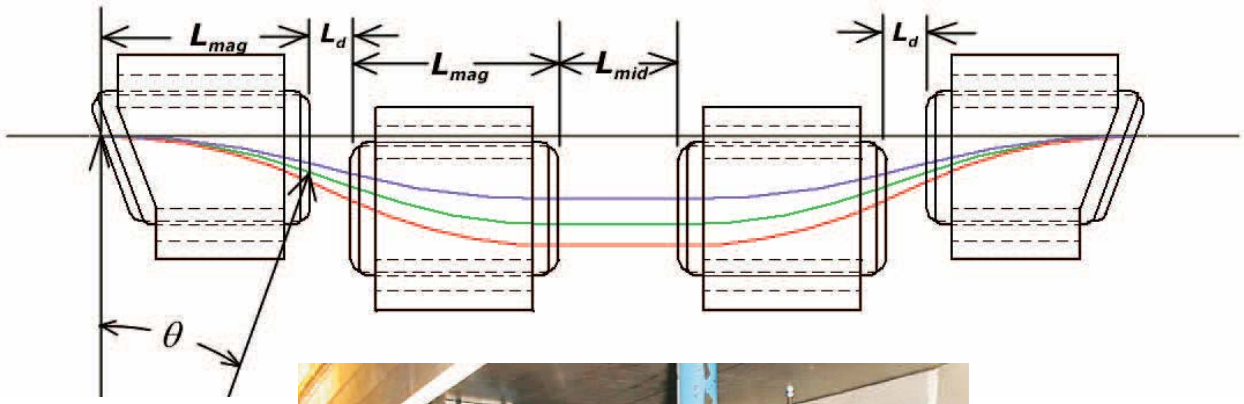

[1] Graphics from R. Agustsson, M.S. thesis, 2004.

STELLA Staged Electron Laser Acceleration

STI OPTRONICS

ATF Chicane + Dog-Leg Combination Creates Compressed Double-Bunches

- While testing chicane for STELLA-LW experiment, discover combination of chicane plus downstream dog-leg dipoles causes beam to break up
  - Two distinct bunches formed separated in time (~0.5-1 ps) and energy (~1.8 MeV)
  - Refer to bunches as “high-energy seed” and “low-energy seed”
  - Bunch lengths are comparable to each other (~100-200 fs)
- Have hypothesis on explanation for beam break up
  - Data thus far seems to support hypothesis
  - Theoretical modeling still needed to fully understand phenomenon
- Talk will explain how double-bunches were characterized and give results
  - Use various diagnostics
  - Also used double-bunches to generate wakefields in plasma (covered in earlier presentation in WG4 on Tuesday)

STELLA Staged Electron Laser Acceleration

STI OPTRONICS

Schematic of ATF Chicane/Dog-Leg

- Note, explanation for beam break-up must still be confirmed.

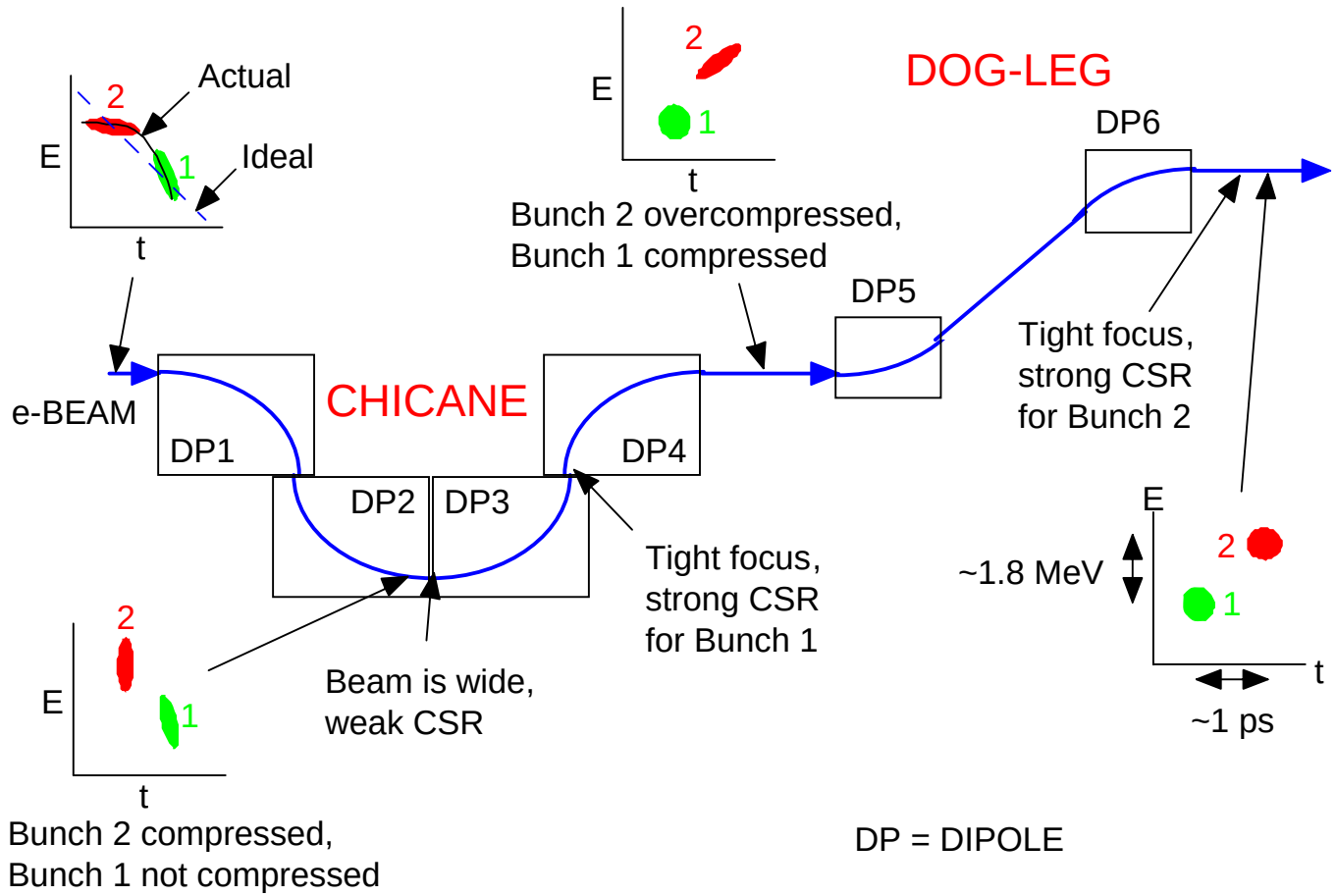

Raw Energy Spectrum Data

At chicane, beam is ~4% FWHM.
No breakup yet

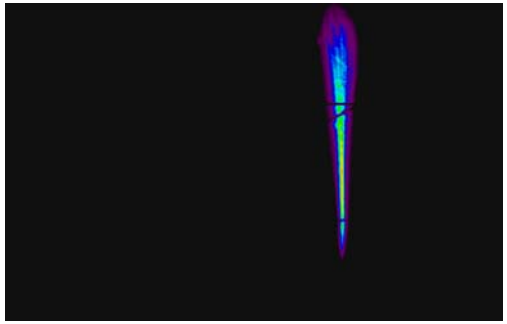

Energy dispersion

Beam profile at high energy slit immediately downstream of chicane. Two bunches have ~1:0.6 charge ratio

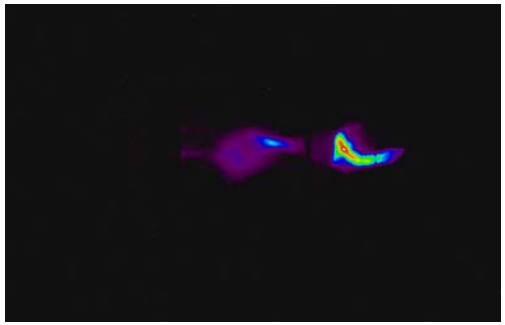

Energy dispersion

Spectrometer output after dog-leg

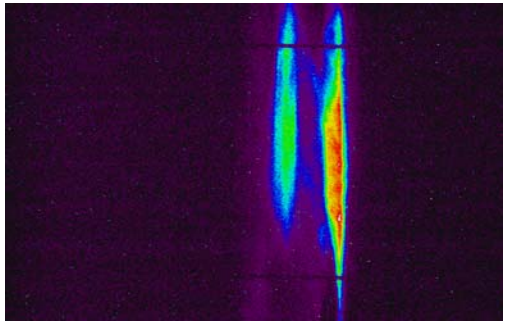

Energy dispersion

STELLA
Staged Electron Laser Acceleration

STI OPTRONICS

Typical Double-Bunches Energy Spectrum

~1.8 MeV

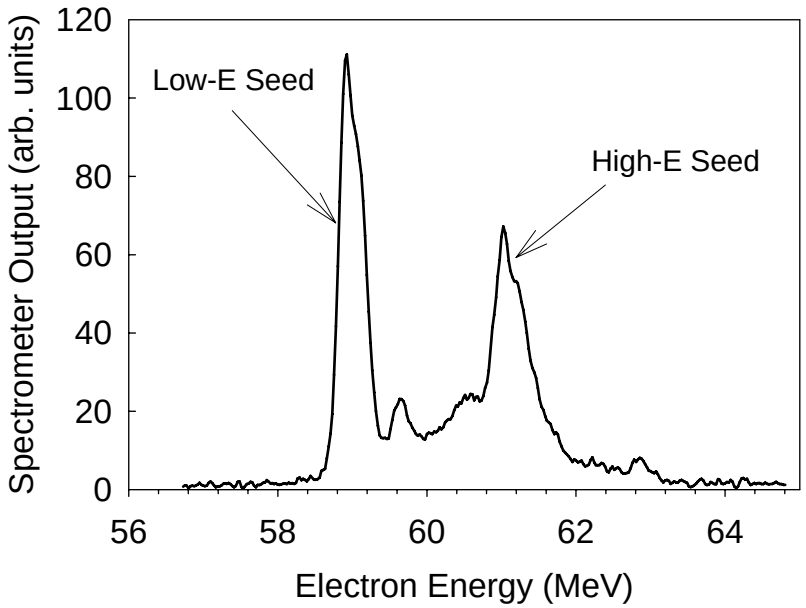

Overlap of three different shots shows good reproducibility

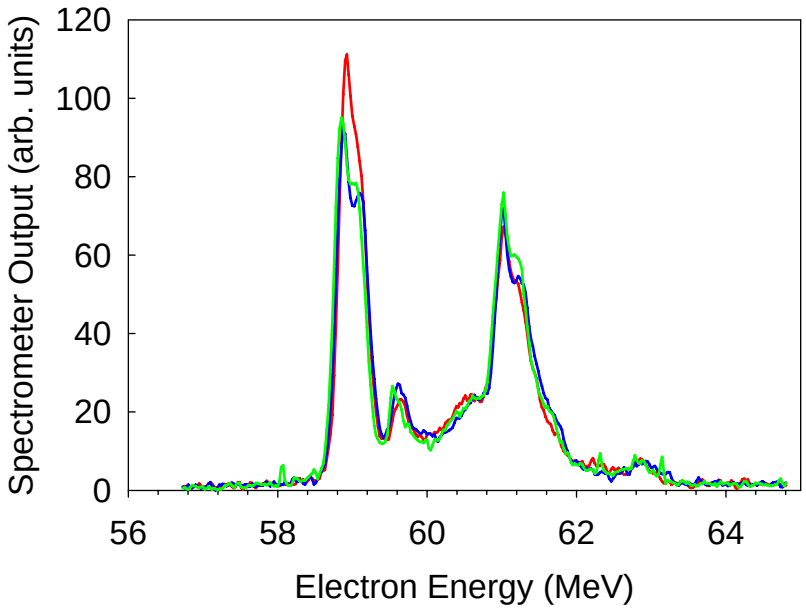

STELLA
Staged Electron Laser Acceleration

STI OPTRONICS

Use CTR Interferometer to Characterize Double-Bunches

- Use modified version of commercial CTR interferometer
- *E*-beam passes through foil generating CTR light
  - When compressed, bunches produce CTR at THz frequencies
  - Translating interferometer mirror yields autocorrelation
  - Analysis of autocorrelation signal gives information about double-bunches

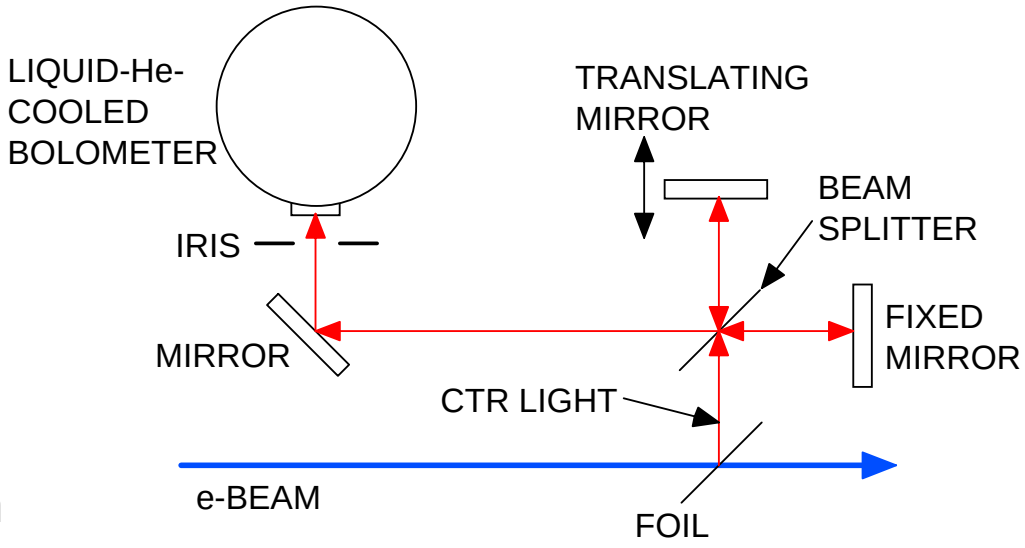

Autocorrelation Integral for Pair of Bunches

- Autocorrelation integral assumes pair of Gaussian-shaped bunches[2]

$$A(s) := \int_a^b I(z) \cdot I(z - s)\, dz$$

$$I(z) := I0 \cdot \left[e^{\frac{-z^2}{2\cdot(\sigma 1)^2}} + \delta \cdot e^{\frac{-(z-z2)^2}{2\cdot(\sigma 2)^2}} - \frac{\sigma 1}{\sqrt{(\sigma 1)^2 + \xi^2}} \cdot e^{\frac{-z^2}{2\cdot\left[(\sigma 1)^2+\xi^2\right]}} - \delta \cdot \left[\frac{\sigma 2}{\sqrt{(\sigma 2)^2 + \xi^2}} \cdot e^{\frac{-(z-z2)^2}{2\cdot\left[(\sigma 2)^2+\xi^2\right]}} \right] \right]$$

- Free parameters:

  $\sigma 1$ = 1st bunch length; $\sigma 2$ = 2nd bunch length;

  z2 = time interval between bunches; ξ = inverse of cut-off frequency

  δ = relative magnitude of 2nd bunch compared to 1st bunch

[2] A. Murokh, *et al.*, Nucl. Inst. Meth. Phys. Res., **A 410**, 452 (1998).

STELLA Staged Electron Laser Acceleration

STI OPTRONICS

Autocorrelation Analysis Process

- Need to reduce number of free parameters by using ancillary data
  - Bunch lengths can be determined by examining single bunch CTR data
  - BPM images can be used to estimate amount of charge in each bunch, thereby yielding value for δ
- Leaves time separation (z2) and cut-off frequency (ξ^{-1}) as free parameters when fitting theoretical curve with double-bunch data
  - Cut-off frequency affected by geometry of THz collection system and by focus/shape of *e*-beam on CTR foil
  - Although collection system geometry is generally fixed, focus characteristics of *e*-beam on foil can change
- Solve autocorrelation integral using Mathcad with no approximations

STELLA Staged Electron Laser Acceleration

STI OPTRONICS

Example of Autocorrelation Data – Single Bunch

- Use high-energy slit to block one bunch from reaching CTR interferometer
- Width of central peak sensitive to bunch length

- Parameter values for theoretical fit:
  - High-energy bunch length = 144 fs (1-σ)
  - Cut-off frequency = 1.7 THz

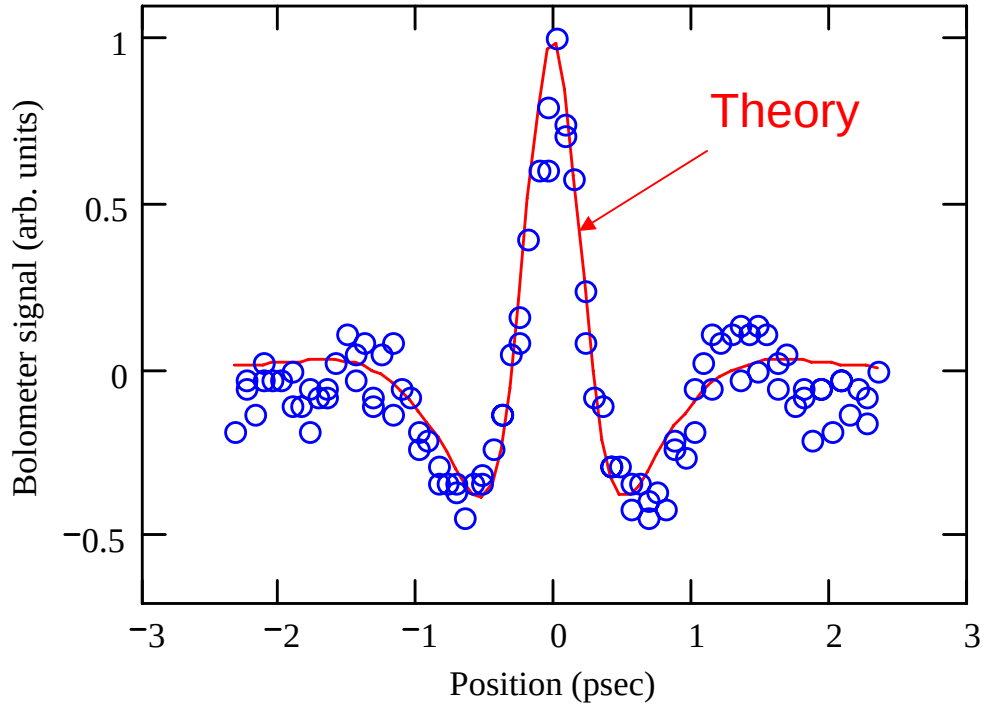

Example of Autocorrelation Data – Double Bunch

- Use ancillary data to reduce number of free parameters

- Parameter values for theoretical fit:
  - High-energy bunch length = 144 fs (1-σ)
  - Low-energy bunch length = 90 fs (1-σ)
  - Low-E bunch charge = 0.6 x High-E bunch
  - Low-E bunch is 500 fs behind High-E bunch
  - Cut-off frequency = 1.8 THz

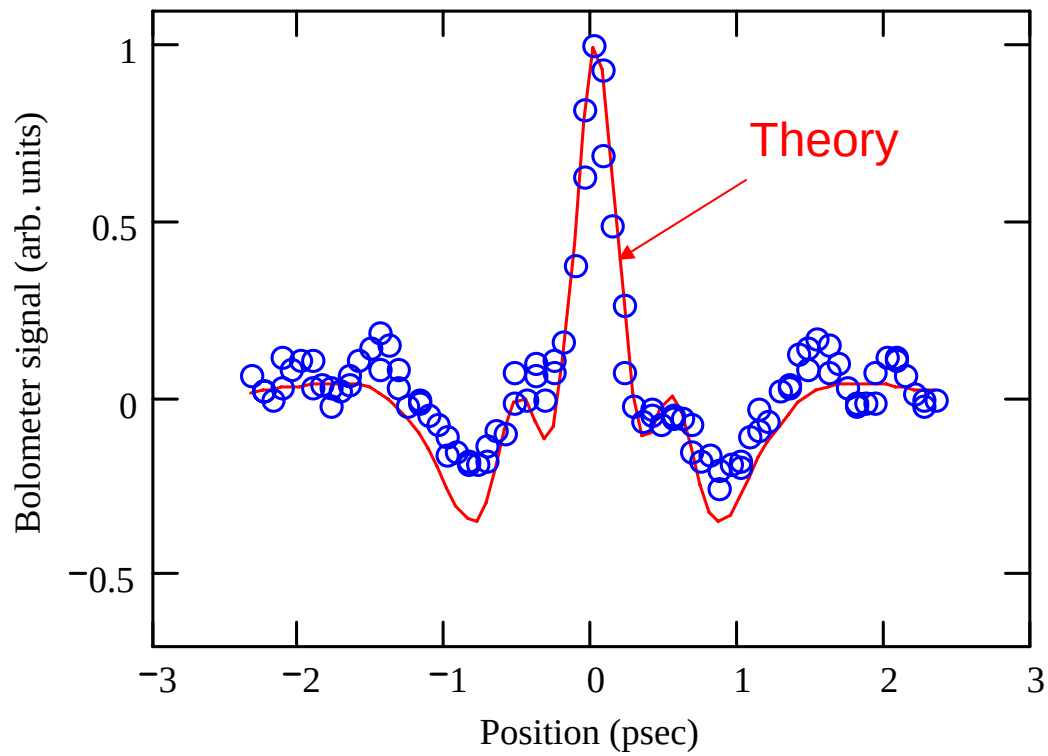

Summary of Double-Bunch Characteristics

- Both bunches are compressed by comparable amounts
  - Amount of compression depends on tuning through chicane
  - CTR interferometer data indicates lengths <100 fs are possible
- Amount of charge in each bunch depends on tuning
  - Can have similar amounts in each bunch or large ratio (e.g., 3:1)
- Delay time between bunches and energy separation may be also <u>somewhat</u> controllable via tuning
  - CTR interferometer data indicated delay times ~0.5-1 ps
  - More data needed on energy separation dependence
- Double-bunch beam is relatively stable once tune is set

STELLA Staged Electron Laser Acceleration

STI OPTRONICS

Double-Bunch Beam Used to Generate Wakefields in Plasma

- PWFA experiment performed using double-bunch beam (see earlier talk on Tuesday in WG4)
  - Sent double-bunch beam into capillary discharge
  - Compared energy spectrum of double-bunch beam with or without plasma
  - Observed energy loss or gain depending on double-bunch characteristics
- PWFA data supports hypothesis that high-energy seed precedes low-energy seed
  - Energy loss rate same for both seeds when sending only single seed through plasma
  - With both bunches sent into plasma, low-energy seed energy gain/loss appears to depend on wakefield from high-energy seed
- PIC modeling results (see E. Kallos' talk on Tuesday in WG4) appear to support double-bunch PWFA results

STELLA Staged Electron Laser Acceleration

STI OPTRONICS

Conclusions

- A novel method for producing subpicosecond bunches from a single bunch has been demonstrated
  - Potentially reliable and simple technique
  - May be useful for energy doubling where the first bunch loses energy and second bunch gains energy, but with small energy spread
- Have demonstrated that wakefields are produced by double-bunch beam
  - Confirmed that wakefield interference can occur
  - Energy gain and loss are sensitive to exact character of double bunches, e.g., relative charge in each bunch
  - Results appear to agree with modeling results
- Modeling analysis using ELEGANT of chicane/dog-leg system is in progress to better understand double-bunch formation process

STELLA Staged Electron Laser Acceleration

STI OPTRONICS