High-Efficiency Resonant Cavity Quadrupole Moment Monitor

FAR-TECH, Inc.

2006 AAC Workshop,
Lake Geneva, Wisconsin
July 10-15, 2006

Nick Barov, FAR-TECH, Inc.

People:

Jin-Soo Kim
Nick Barov

C.D. Nantista
R.H. Miller

*Work suported by US DOE SBIR grant

Outline:

- Previous work
- Integrated quad moment monitor
- Fabrication tolerances
- Wire tests
- Progress on structure fabrication
- Emittance measurement techniques

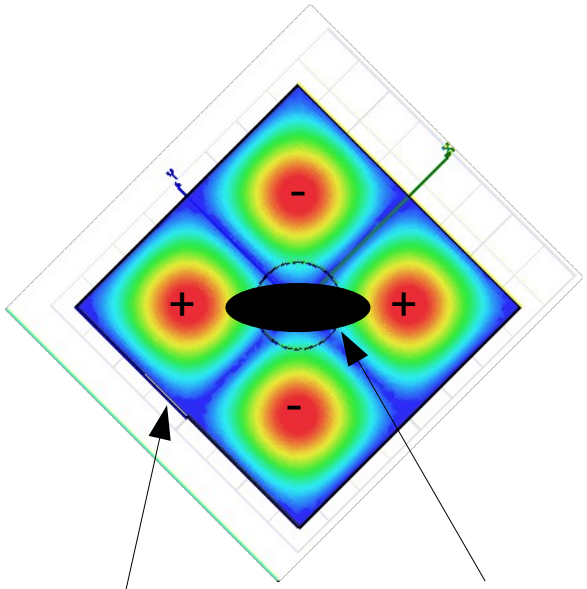

A quadrupole mode cavity can measure the "second order" moment of a beam, $<x^2 - y^2>$. Position measurements are needed to distinguish between a round, offset beam and an on-axis beam with unequal σ_x and σ_y.

Beam with unequal σ_x and σ_y

Quadrupole (TM_{220}) mode profile. Color indicates electric field intensity.

First device was fabricated in 2001 by collaboration between FAR-TECH and SLAC. It was tested at NLCTA (SLAC).

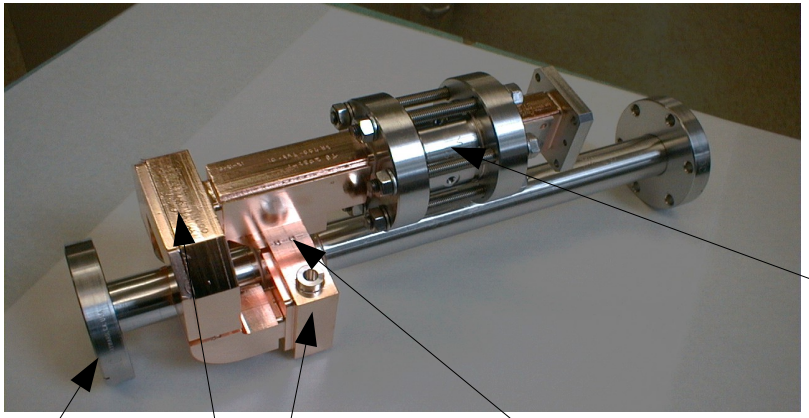

The present project (SBIR Phase II) has high efficiency 2-cell quad cavity, and additional cavities for x and y position.

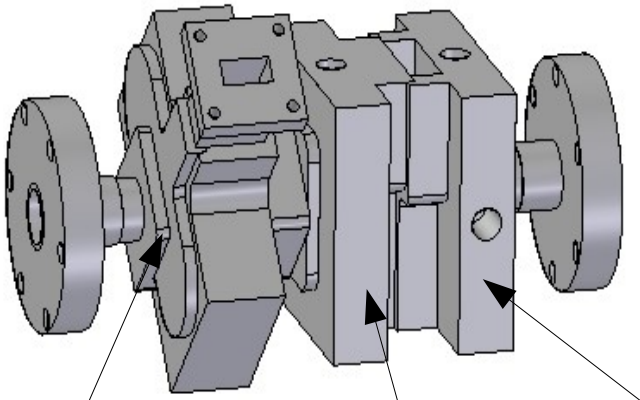

Theoretically possible to measure a 1 micron beam (NLC parameters)

Two high-efficiency 2-cell quadrupole cavity in the π-mode, 11.424 GHz.

Dipole cavity, y-direction, 8.568 GHz.

Dipole cavity, x-direction, 8.568 GHz.

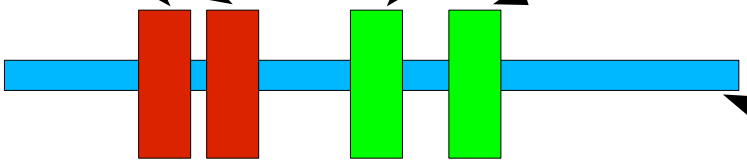

Beam pipe

The shunt impedance of a quadrupole cavity can greatly be enhanced with a partially re-entrant geometry.

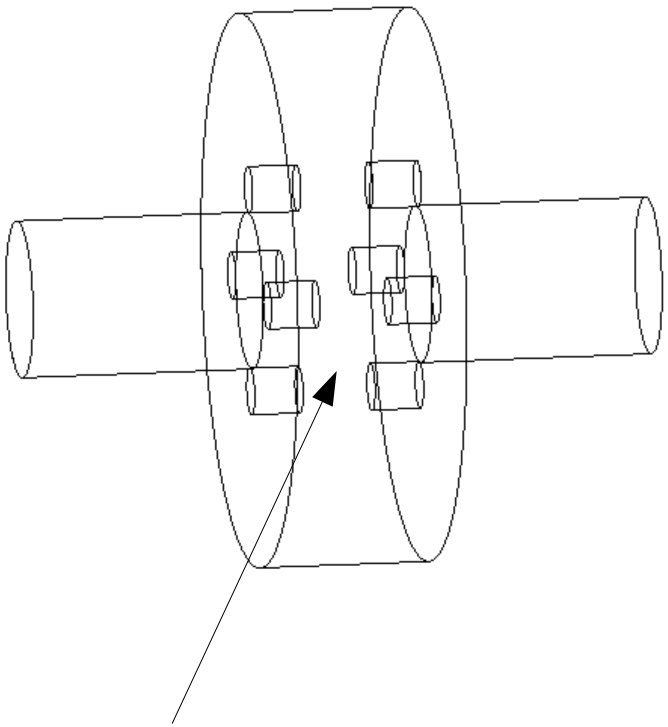

Four capacitive gaps are located near the electric field maxima.

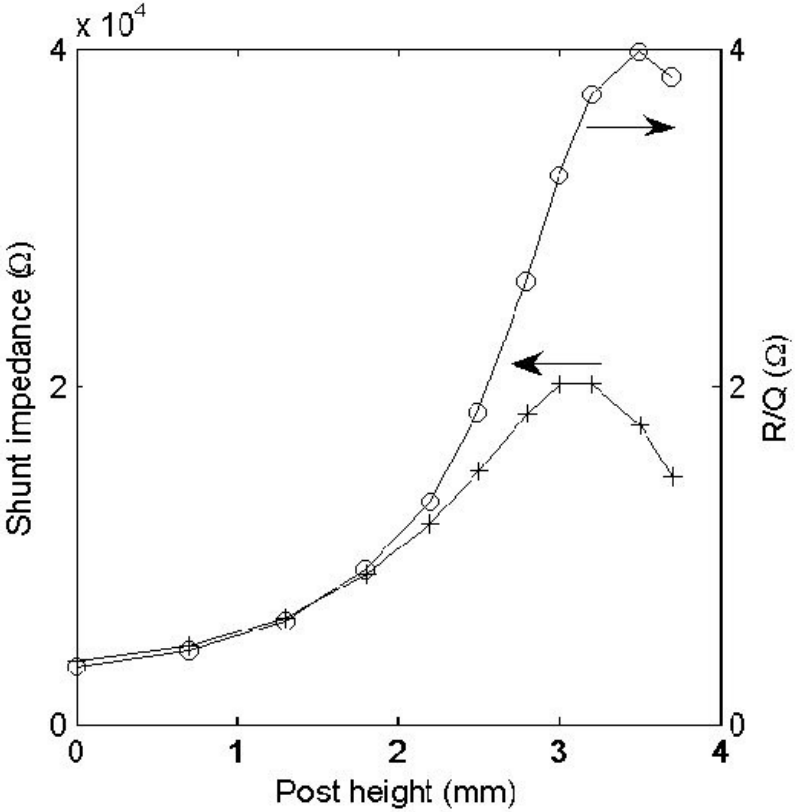

Shunt impedance is increased by a factor of 5, and R/Q is increased by a factor of 11.
(Cavity outer wall is adjusted to maintain resonant frequency).

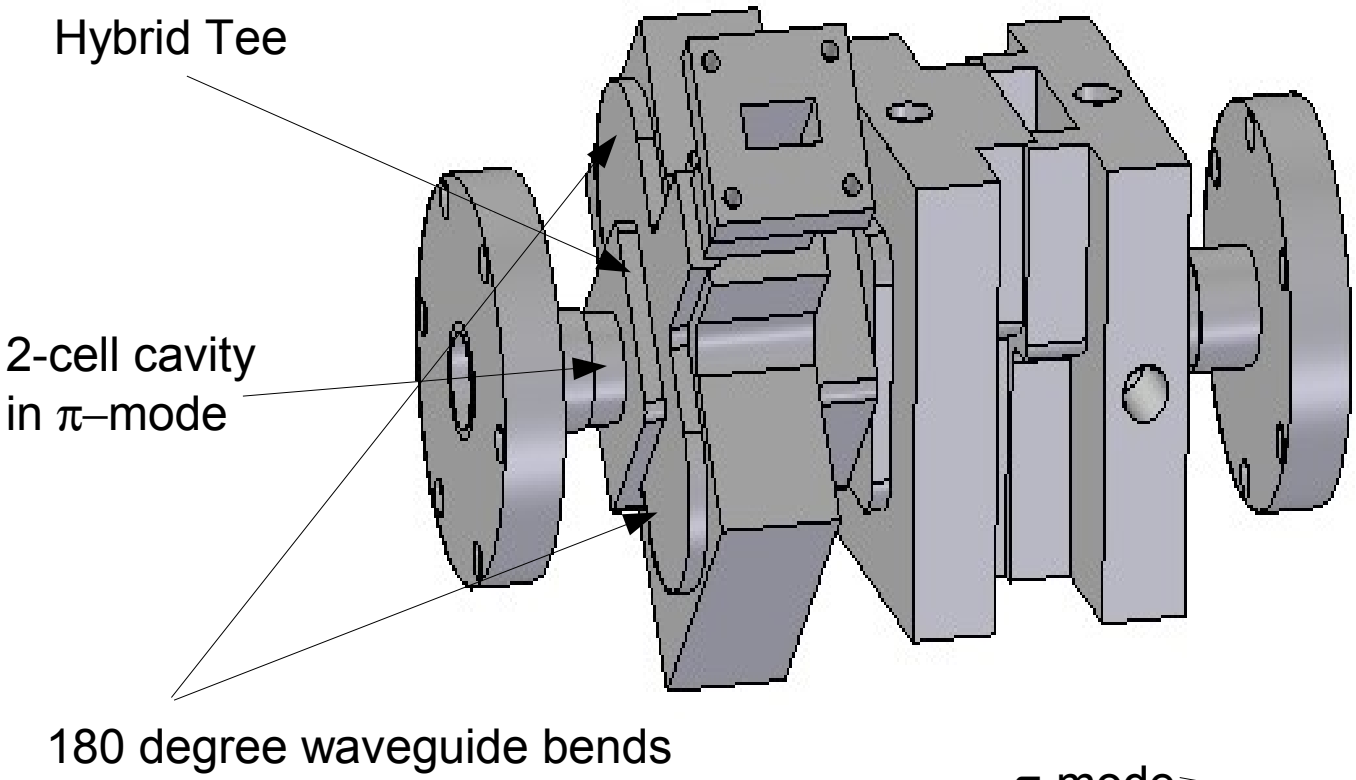

Measurements of cold-test model without the 180 degree bends

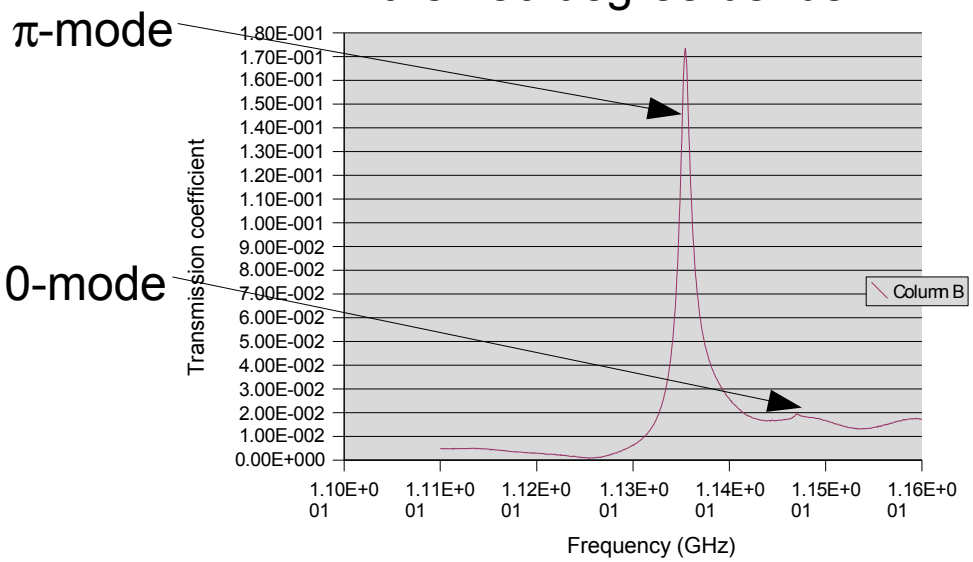

The coupling scheme suppresses:

- The quadrupole 0-mode
- The monopole and dipole modes

Imperfect fabrication tolerances can distort the mode profile.

¼ of cavity geometry

Imperfection in cavity wall.

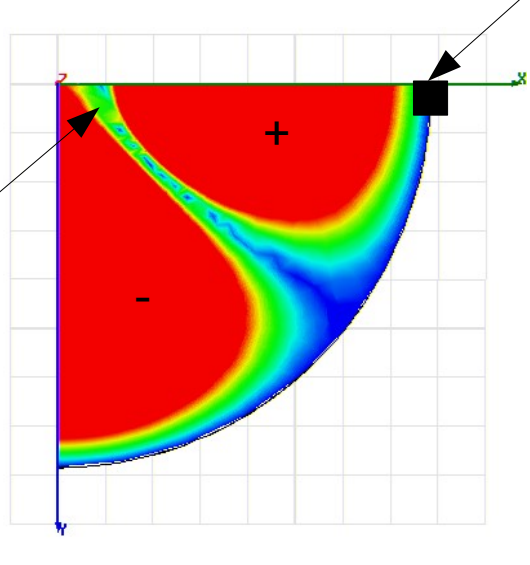

Symmetry at the 45 degree plane is lost

"level shift"

Measurement of $\langle x^2 - y^2 \rangle$ becomes $\langle x^2 - y^2 \rangle + K$

How to assure that cavity does not have a “level shift”?

Measure with wire test method developed at SLAC.

Method originally developed by
Sands and Rees (SLAC note PEP-95, 1974),
more recently used to map NLC HOM's
(see N. Baboi, et al., SLAC-PUB-9807)

This method needs to be adapted to
cover both the 11.4 and 8.6 GHz frequencies,
and to use the device side port.

Preliminary measurements have been made
at SLAC on a test cavity (14.5 GHz).

SLAC test stand
measuring an accelerating
cavity.

Structure fabrication:

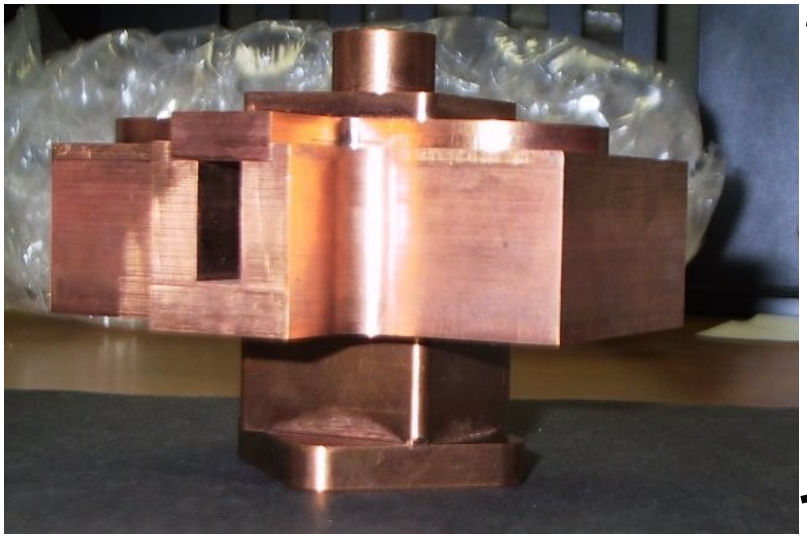

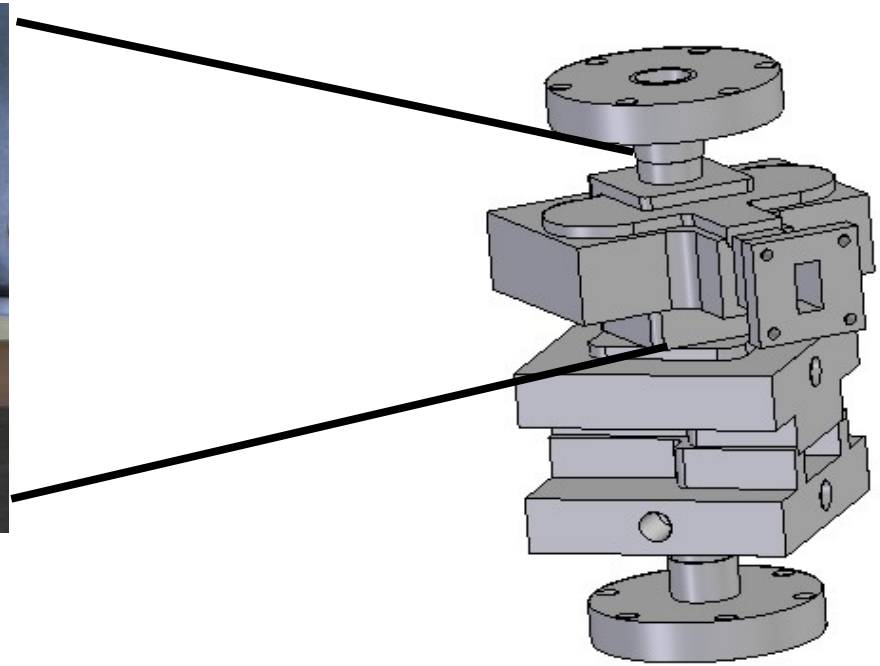

Emittance measurement techniques (cont.):

Method due to R. Miller, FODO lattice with quad moment cavity at each magnet

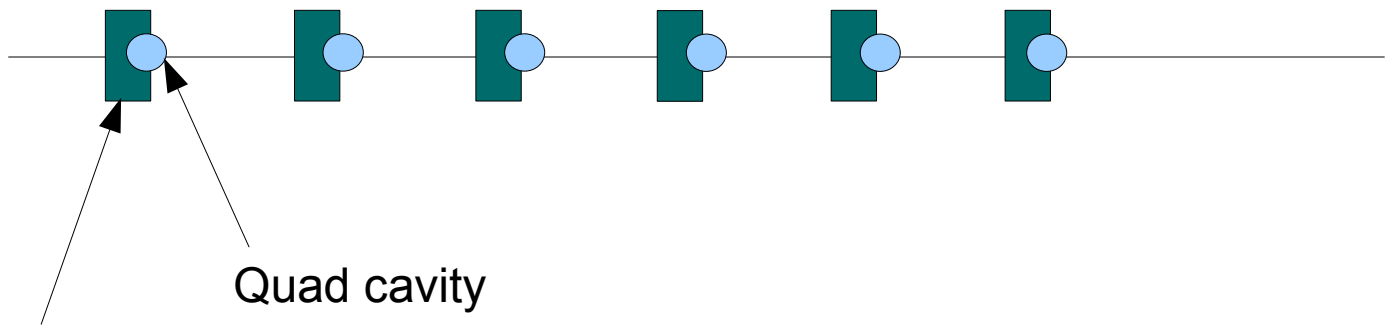

$$\sigma_i = R_i \sigma_0 R_i^T$$

Six equations, six unknowns

Solution of six equations (by matrix inversion) must be well-behaved.

R.H.Miller et al., Proc. Of the 12th Conf. On High Energy Accelerators, FNAL, 1983, p602.
S. Russel, NIM-A 430, p.498 (1999)

Emittance measurement techniques (cont.):

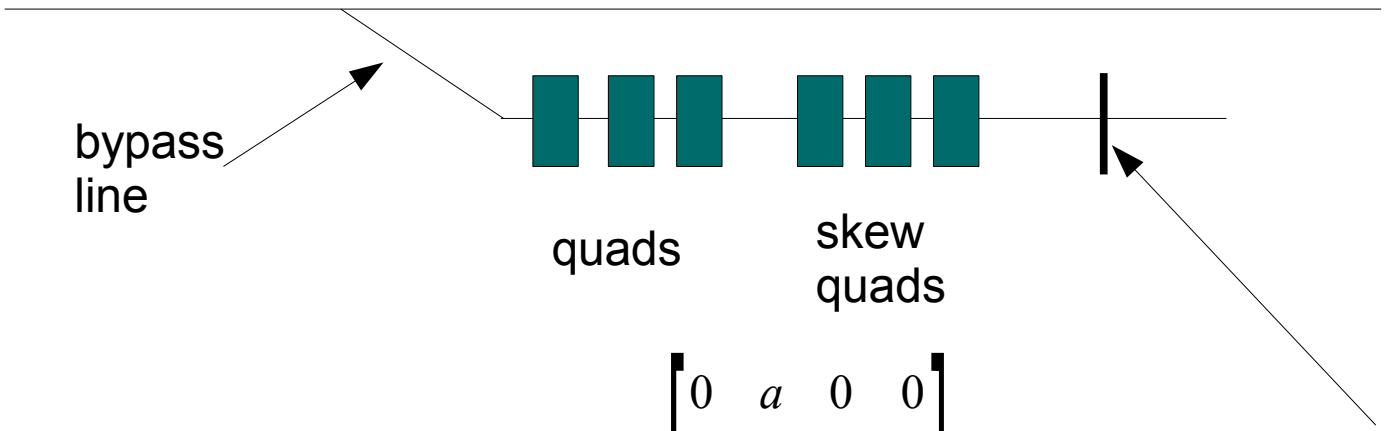

$$R=\begin{bmatrix} 0 & a & 0 & 0 \\ 0 & 0 & b & 0 \\ c & 0 & 0 & 0 \\ 0 & 0 & 0 & d \end{bmatrix}$$

Original phase space x,x' is mapped to screen x,y.

Alternatively can use a set of cavities:

- normal cavity measures $\langle x^2 - x'^2 \rangle$
- Skew cavity measures $\langle xx' \rangle$
- Demagnify in y, normal cavity measures $\langle x^2 - 4x'^2 \rangle$

$$\epsilon=\sqrt{\langle x^2\rangle\langle x'^2\rangle-\langle xx'\rangle^2}$$

Conclusions:

- An integrated monitor with efficient quadrupole cells has been designed and is being fabricated; will be tested soon
- The device can be incorporated into a beamline in a variety of ways to measure the beam position, emittance and x-y coupling.