Light Modulator Notes
A collection started on Jan 05, 2009
V 3 -Additions Jan 07, 2009
V 4 - Additions Jan 8, 2009
V 5 - Additions Jan 27, 2009
V 6 – Deletions Feb 9, 2009
D. Underwood

Our interest is in extremely low mass light modulators for data transmission. These would be used in upgrades to the ATLAS detector at the Large Hadron Collider at CERN. There will be many layers of pixel detectors around the beam pipe with millions of data channels. Outer tracking using GEM detectors would face the same issues. The Analog to Digital converters and channel multiplexers could be on chips on the detector layers. A special rad-hard transciever chip, called GBT, for sending this data, is being developed jointly by the ATLAS and CMS collaborations at CERN.

The next problem is to get the data off the detector.
A proposed way to do this is to send in light over quartz fibers to light modulators on each readout chip. The modulated light would come out on another fiber.
If the fibers are not radiation-hard to the extent necessary, we could use laser beams with no fiber. The beams could be steered with MEMS mirrors now being developed. These mirrors could also compensate for vibration with a feedback loop.

Some possible characteristics of a light modulator:
1) Something like 20 to 40 Gigabit rates from each of a large number of light modulators (A link to a talk by H. van der Graaf on detectors and readout is attached below)
2) Very low mass in the sense of radiation lengths, and low cooling requirements.
We want less than 10% of a radiation length of material summed overall the detector layers and electronics.
A major problem in the existing system is the mass of the cooling system for the electronics. The heat increases as the radiation damage increases and leakage currents in Silicon increase.
(A picture of existing radiation lengths is either attached or linked below)
3) The radiation levels will be very high. (A note on radiation levels is attached below, and there is a reference to measurements of radiation hardness of SiGe by ATLAS collaborators specifically for the super LHC upgrade.)
4) We can test the radiation hardness for charged particles at the upgraded Chemistry Division Linac. (A set of 3 transparencies is either attached or linked below)
5) A radiation test beamline is being proposed for the Advanced Photon Source (APS) at Argonne.
6) The reference to the SiGe modulator prototyped at MIT shows that their device can be integrated into a CMOS electronics chip. This is extremely small and has low power requirements. They give a detailed description of how they did this.
(A portion is copied below) [xx]
7) A very small, low power light modulator is being developed by IBM for communication between chips. [yy]
8) There is a set of technical notes about uses of LiNbO3 modulators by

Photline Technologies describing choices of amplitude modulation, phase modulation, choices for different frequencies, etc. [zz]

Our immediate goal would be to fabricate such a modulator in such a way that it could be coupled to the CERN readout chip. The assembly could be tested in the APS or the Chemistry division linac or Van de Graf beamlines while doing continuous readout with optical signals.

This might be done by fabrication of a chip which would have only CMOS driver transistors and the modulator. Perhaps this could be fabricated at Argonne Center for Nanoscale Materials with input from the MIT group which made the prototype.

Also, Argonne CNM and Bell Labs are each developing MEMS mirrors which could be appropriate to steering laser beams.

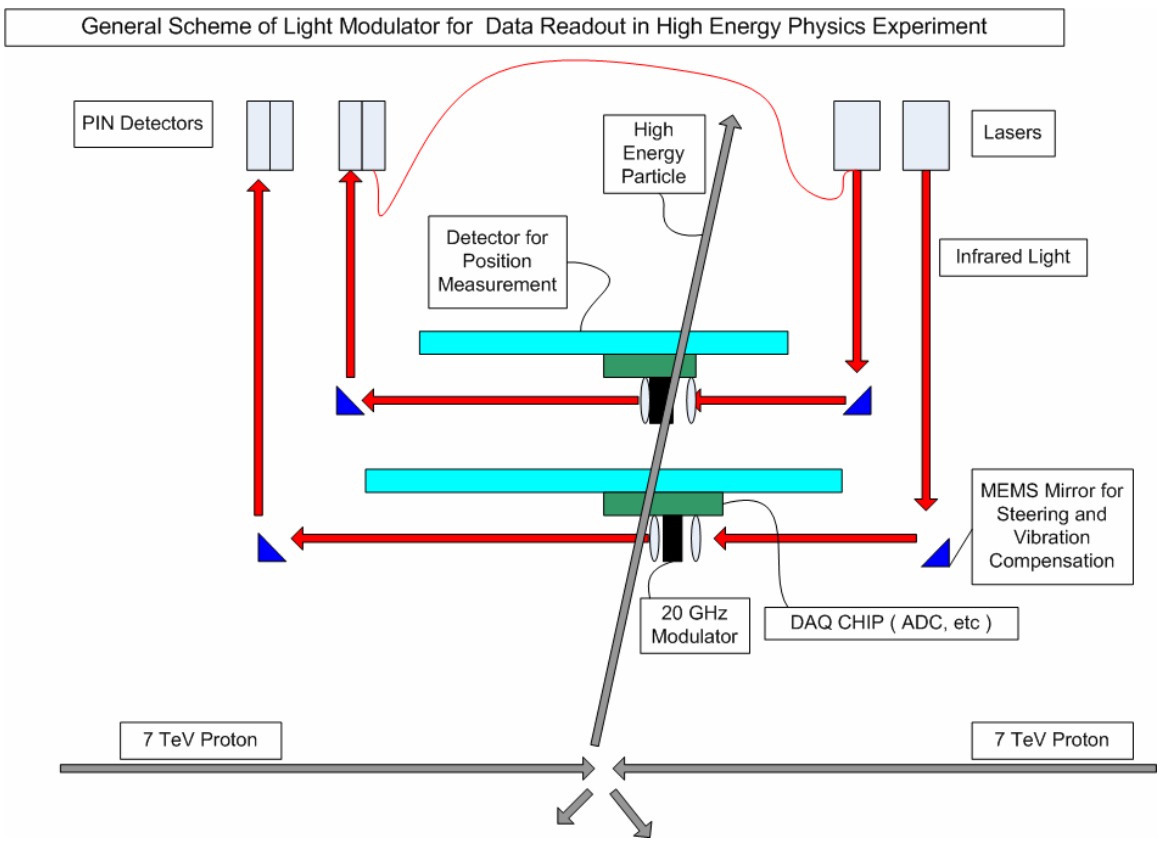

Figure showing scheme with laser in air, no fibers.

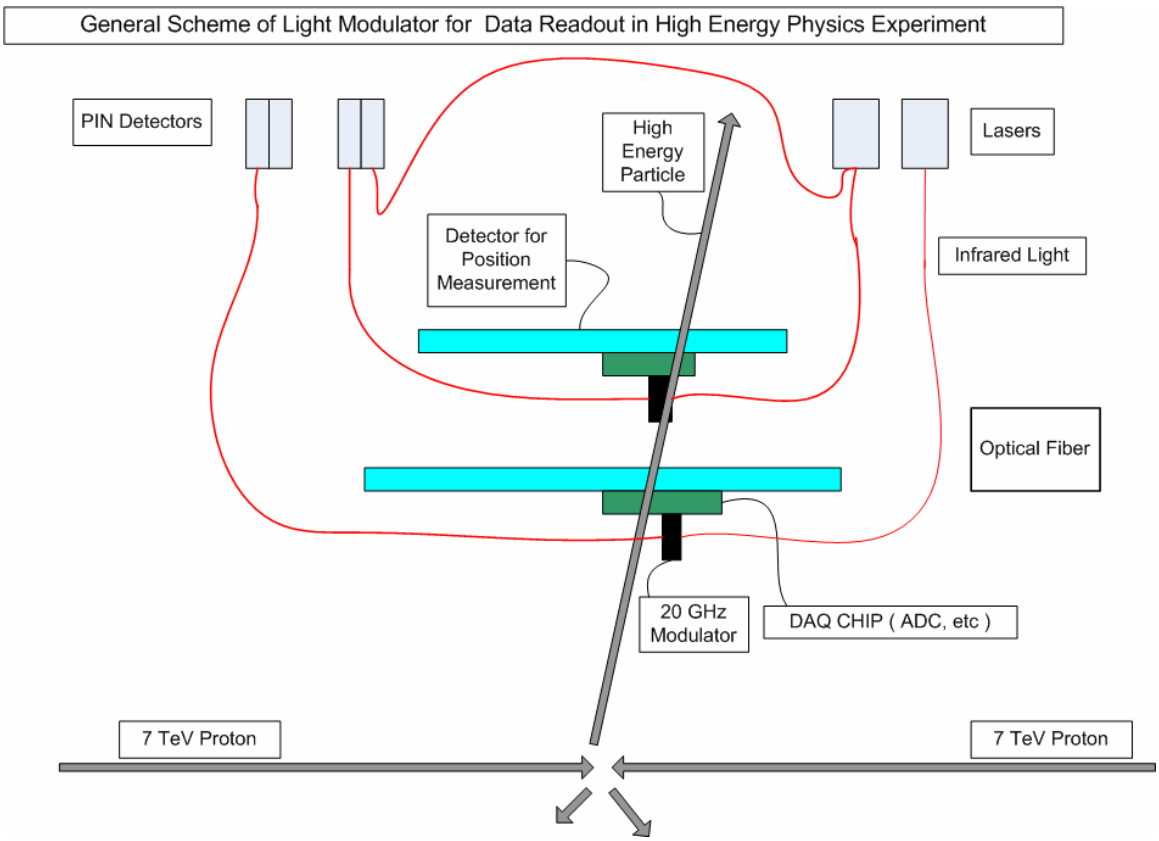

Figure showing scheme if fibers can be used in the radiation environment.

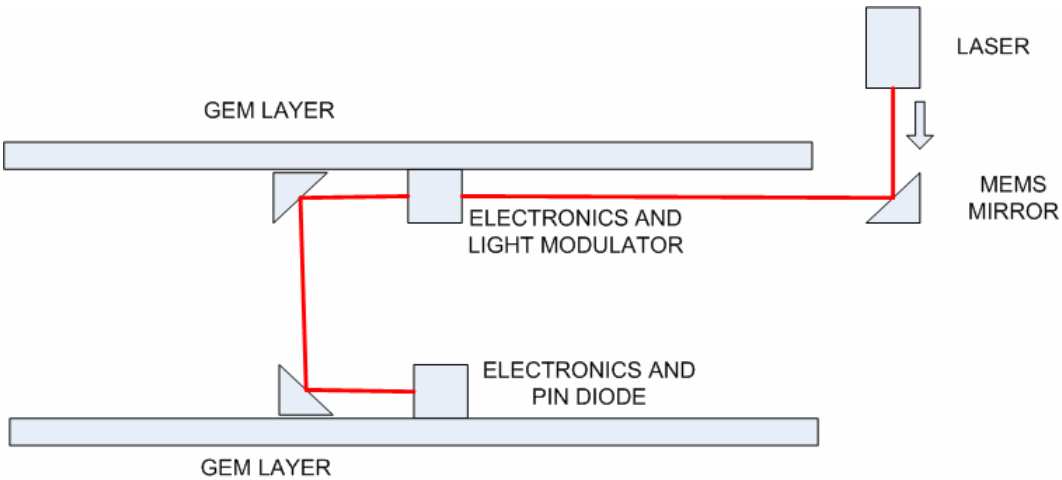

Figure BBB. Our proposed Optical connection between tracking layers for triggering on track angle (momentum).

We are studying an Optical connection between pairs of GEM planes .
This would be used to provide part of a trigger input, so that not all the data would have to be read out over huge numbers of fibers to get all the pixels in every crossing.

This is analogous to the 3D electronic chip which would provide electronic pathways between pixel layers as has been described by Marcel Demarteau and others at Fermilab.

THE MIT DEVICE:
Paper by Liu, et al. as described in Nature Photonics, December, 2008
http://www.nature.com/nphoton/journal/v2/n7/pdf/nphoton.2008.111.pdf
http://www.nature.com/nphoton/journal/v2/n7/pdf/nphoton.2008.99.pdf

THE MIT SYNTHESIS METHOD:
(As described in the paper)
The c-Si and a-Si waveguides, as well as the c-Si patches for GeSi epitaxial growth, are defined by standard photolithography and reactive-ion-etching processes. Before GeSi epitaxy, the c-Si patch was implanted with boron to a doping concentration of $1x10^{19}$ cm-3 and annealed to activate the dopants. Both the c-Si and a-Si waveguides were 500 nm wide and 200 nm high, typical of single mode channel waveguides on Si. The transmission loss of 6 dB cm-1 for the transverse –electric (TE) mode in c-Si waveguides was measured by the cutback method from paper clip structures. The propagation loss in the a-Si input and output waveguides was <0.5dB, because these segments were only 100um long. Tapered structures were carefully designed for efficient c-Si to a-Si waveguide coupling, and a low coupling loss of 0.3 dB was measured experimentally. Details about the taper design will be reported elsewhere. A trench was opened between the input and output segments of the a-Si waveguides, and epitaxial GeSi was selectively grown to fill the trench using ultrahigh-vacuum chemical vapour deposition (UHVCVD) and to achieve butt-coupling with the a-Si waveguides. The GeSi alloy comprised 0.8 % silicon for optimal EA modulation performance around 1,550 nm (ref. 16). The composition was achieved by computerized precise control of the GeH4 and SiH4 gas flow and pressure in the reactor. A 40 nm-thick GeSi buffer was grown at 360 C to prevent islanding of the GeSi film. The growth temperature was then raised to 730 C for 15 min to decrease the threading dislocation density to $1x10^{7}$ cm-2. Note that the GeSi epitaxy and subsequent annealing steps were inserted in the CMOS flow after polysilicon gate and silicide formation but before tungsten deposition, so the required thermal budget of 700-850 C for growth and dislocation reduction could be readily accommodated. [18] The faceted surface of epitaxial GeSi was planarized to the top of the oxide trench by chemical mechanical deposition (CMP), and the final thickness of GeSi was 400 nm. This step was followed by deposition of an a-Si layer, which was implanted with phosphorus, annealed and etched to form a n+poly-silicon electrode on top of the Ge-Si. The n-type doping concentration in the poly-silicon was 1×10^{19} cm-3. Finally, tungsten and aluminum/copper were used to form metal vias and contact pads, respectively. The GeSi materials composition and the fabrication process of the EA modulator are the same as for the butt-coupled GeSi photodetectors reported earlier [18]. This technique allows efficient monolithic process integration of the modulators and the photodetectors on an SOI platform. More details about the CMOS process integration can be found in ref. 18.

THE IBM DEVICE

http://www.photonics.com/Content/ReadArticle.aspx?ArticleID=32251

This is a Mach-Zehnder interferometer modulator, but it is only 550 micron by 220 micron in cross section for 1550 nm light. They believe it could be a factor of 50 shorter than conventional modulators. The prototype ran at 41 mw total power.

RADIATION ISSUES:

The order of magnitude could be as much as 10^6 Gy/year of radiation from charged particles. These are high energy, and go through the devices and leave what is called minimum ionizing energy pretty much independent of energy of the particle.

There might also be something like 10^{15} neutrons / cm^2 / year. This is 1 MeV neutron energy equivalent.

The current leakage would only be a problem if it required more cooling because of the heat generated by leakage currents. This is a big effect in Silicon detectors with 300 U thickness and of order a hundred Volts.

There is information on the radiation hardness of SiGe electronics:

"Radiation hardness evaluation of SiGe HBT technologies for the Front-End electronics of the ATLAS Upgrade", M. Ullán[a], , S. Díez[a], F. Campabadal[a], M. Lozano[a], G. Pellegrini[a], D. Knoll[b] and B. Heinemann[b], NIM A, 579, Sept. 2007, page 828

Abstract

We studied the radiation hardness of different SiGe BiCMOS technologies in the search for a proper microelectronic technology to be used in the design of the Front-End chip for the readout of detectors of the Inner Detector of the ATLAS Upgrade for the future Super-LHC. Gamma and neutron irradiations were performed in order to account for ionization and displacement damage. The results show that all technologies are still functional after irradiation to the levels expected at the real experiment. Small differences were observed among technologies, therefore more statistics would be needed in order to make a selection of technology for the final design.

RADIATION LENGTHS of Material IN EXISTING DETECTOR:

Radiation Lengths of material is a measure of the mass and type of the materials which can, for example, absorb energy from electrons or convert photons to e+e-.

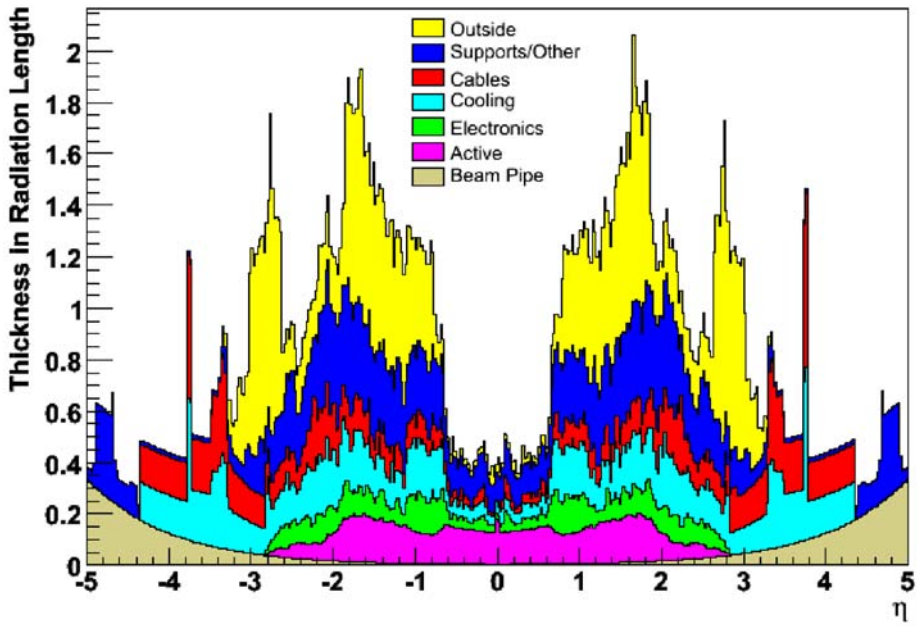

Figure showing contributions of obstructing material (in radiation lengths) in the existing ATLAS detector. Eta of +-0.6 is about +-33 degrees in angle from perpendicular to the beamline.

ARGONNE CHEMISTRY DIVISION LINAC and VDG

Chemistry Division LEAF consists of two accelerators, electron linac and Van de Graaff. In short, parameters of the accelerators are:
Linac:
Electron energy: 2-20 MeV
Electron current: 200 mkA max (limited by heat load on the window)
VDG:
Electron energy: 0.5-3 MeV
Electron current: 200mkA max (limited by heat load on the window)

Maximum achievable dose will depend on the sample and ability to dissipate heat. Our standard irradiation conditions without external cooling allows us deliver dose on the order of 100Gy/s for a small water samples. Maximum achievable dose for solid/liquid sample would be on the order of 6 kGy/sec.

Two power point slides with a description of the facilities are below.

3 MeV Van de Graaff accelerator facility

Electron beam
- e^- energy 1-3 MeV
- Pulse width 5-100 ns or DC
- Maximum electron current 500 μA

Positive ion beam
- energy 1-3 MeV
- Maximum current 500 μA
- DC only

- Extremely stable electron beam
- High repetition rate (up to 5KHz)
- Pulsed EPR/ODMR spectrometer equipped with a cryogenic unit (down to 4 K)
- Ability to deliver doses to GGys in short time: effects of extreme radiation fields can be studied
- EPR/ODMR spectroscopy provides both dynamic (10 ns time resolution) and structural information

20 MeV linac accelerator facility

- e^- beam energy 8-20 MeV
- Pulse width 30 ps - 5 μs
- Pulse to pulse stability better than 1%
- Repetition rate from single shot to 60 Hz
- Dose rates to 120 kGy/s

SLIDES SHOWING PROPOSED ATLAS at CERN DETECTOR LAYOUT:
From RD51 talk by Harry van der Graff of Nikhef, Netherlands.

Data Transport

- to outside world
- inter (pixel) chip communication
- Level 1 trigger

status: kapton/aluminium: dominant material for pixel detectors @ sLHC!
VCels + optical fiber: not rad hard, much material, much power required

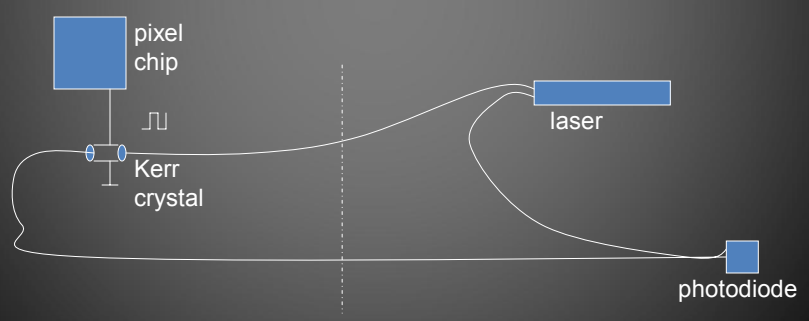

GOAT: GOssip in ATlas

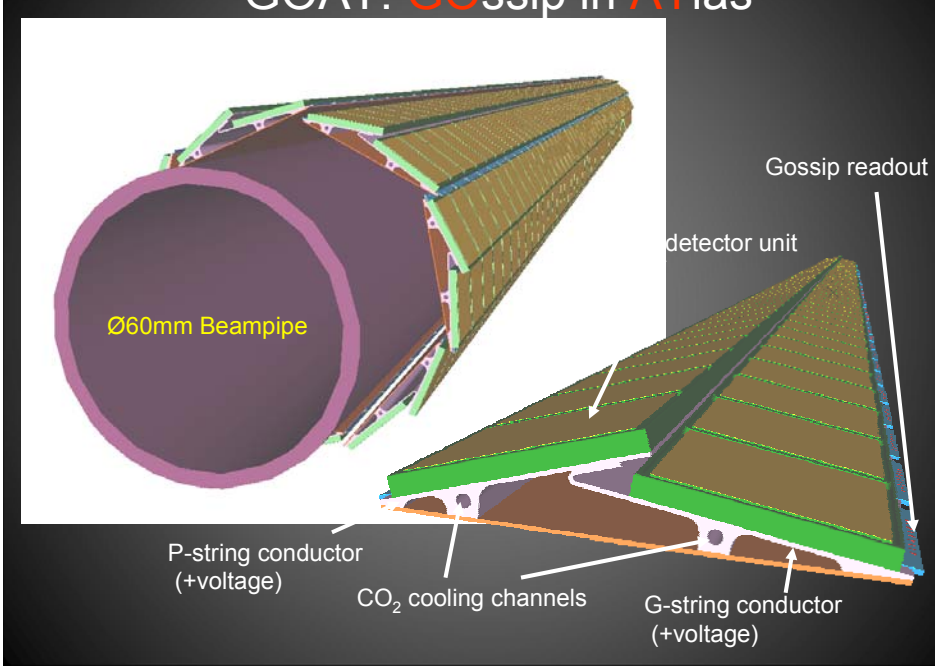

Tracking Trigger Question
David Underwood
Jan 26, 2009.

I have been looking into large bandwidth ways to get data out of a tracker that might be suitable for a tracking trigger in either ATLAS or CMS. While new technology light modulators appear to make this feasible with very low mass and very low power near the detector, the amount of information is probably impractical if it is simply sent off-detector.

As an example, for sLHC assume 400 events per crossing, 40 tracks per event inside the tracking, and 40 Mhz crossing frequency. Assume the readout strip lengths in the tracker are small enough to get 2 % occupancy. Assume that zero suppression and multiplexing are used. Then I get 4000 fibers at 40 Gbit/sec each for each of 10 layers of tracking in phi alone. Possibly 80,000 fibers to get everything out. This is probably optimistic, it could be more if function technology is not as good as lab prototypes. Note that with a calorimeter trigger of 100 KHz, only 10 fibers per layer (in phi) are needed, assuming one could find a way to route data over a large area to these few fibers.

(Calculation in a separate document)

I have heard a couple of talks by Marcel Demarteau at Fermilab about 3-D electronics. This would allow two sensor layers back to back with communication between them. The idea is that some processing for a high-pt trigger could be done on-chip and so not all the data would have to be brought off-detector. An example presented is pixels of 50 micron with 1 mm separation between layers. There would be an angle cut made in each pair of layers.

It looks like this could be scaled up a factor of 10 in dimension for outer tracking by using optical links between e.g. GEM tracking layers instead of conduction paths within a thick chip.
This is essentially the technology being developed by IBM, MIT, etc for communication inside computers. It might be augmented with tiny MEMS mirrors such as have been fabricated with Argonne CNM.

However, I have a question about how all of this could be used. If there are 400 events per crossing, it seems that there must be at least one track of over 5 GeV/c in every crossing. Even with a perfect trigger, this still leaves every crossing to be read out unless one could read out only a region of interest from tracking. Assuming this was viable for physics, there is still a technological problem of getting the data from the region of interest to one of a few fibers if there are not fibers from each region of the tracker
(ie, at least 4000 fibers per layer)

I am working with a group studying the following:
Question 1: Does it make sense to make the pt cut high enough so that

the rate above X GeV/c is only 100 KHz? What is this PT?
Question 2: If the trigger is done in patches of eg, 800 pixels, what is the rate of fake triggers due to multiple hits in each patch?
Question 3: How does one use a pt cut in each pair of layers to make an overall high pt trigger, given some rate of multiple hit fake triggers in each pair?