Laser Test Stand Progress

Camden Ertley

Setup

MCP: Mark-0

HV: 1900V

Events: 5000

CFD: Ortec 9327

Threshold: -50mV

Walk: 5mV

Start: laser sync

Stop: MCP output

Laser: 635nm

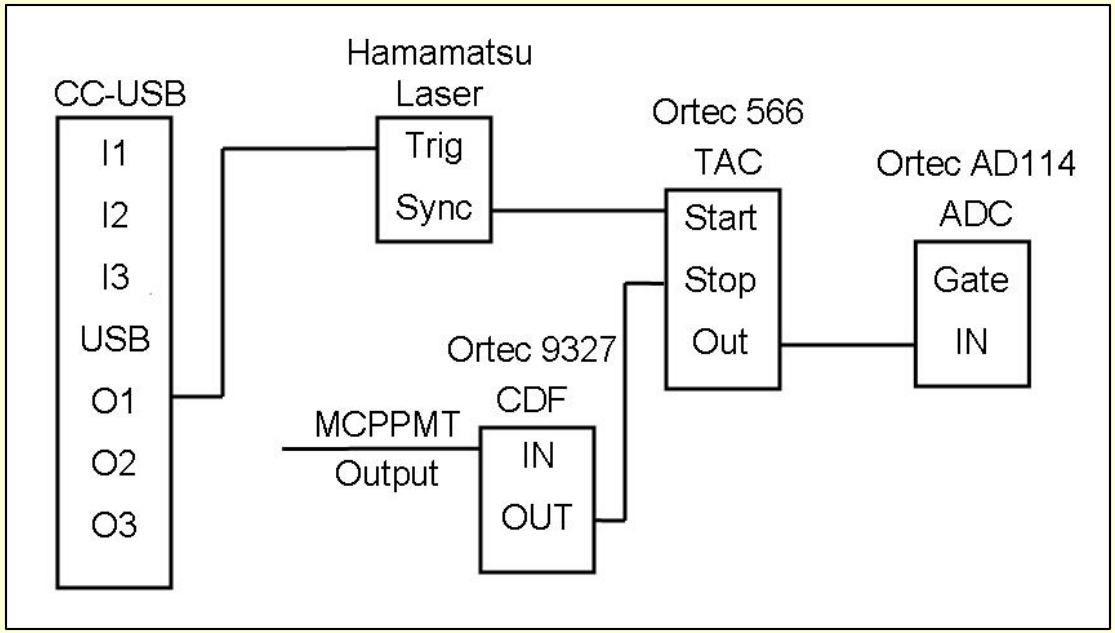

*Changes to old setup in red.

Results

Run	Mean	Mean Error	Sigma	Sigma Error	ND Filter	Jitter (ps)	Npe	
709	6190.85	0.317	19.6062	0.245	3.5	61.2694	0.916	
10	190.32	0.321	8.3758	0.236	3.4	57.4244	1.04	
711	6187.94	0.28	16.3829	0.19	3.2	51.1966	1.38	
712	6182.03	0.243	15.1978	0.172	3.1	47.4931	1.84	
713	6178.73	0.216	15.5822	0.154	3.0	48.6944	2.26	
714	6166.89	0.159	10.2312	0.116	2.8	31.9725	4.29	
15	155.44	.123	.84453	0.087	.6	4.5142	7.04	
716	6152.31	0.0938	6.47976	.0676	2.4	20.2493	9.33	
717	6151.51	0.0749	5.14988	0.0533	2.2	6.0934	4.2	
18	258.28	0.0519	3.63253	0.0352	2.0	1.3517	24.3	10dB att
719	6257.58	0.0516	3.5826	0.0344	1.8	11.1956	40.6	10dB att

Results

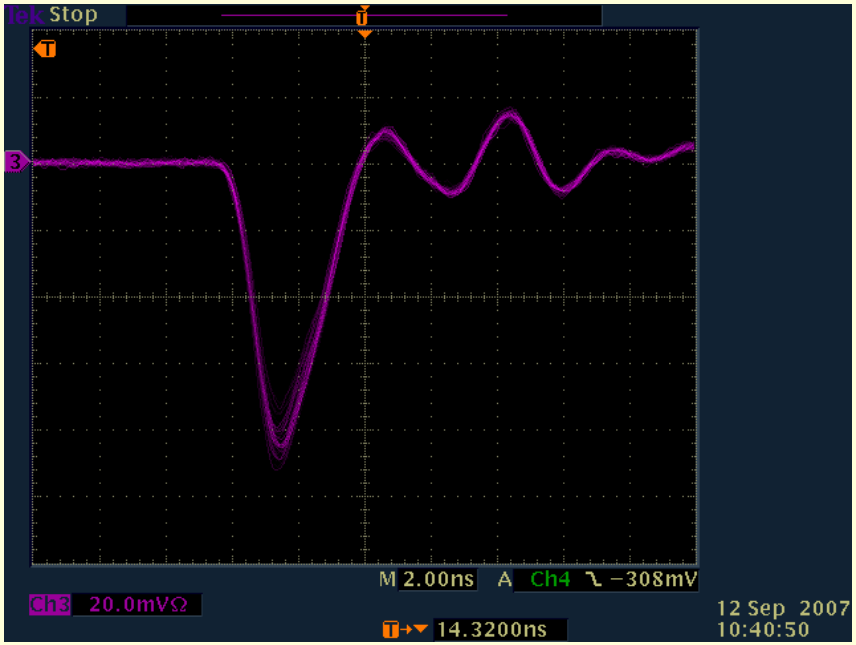

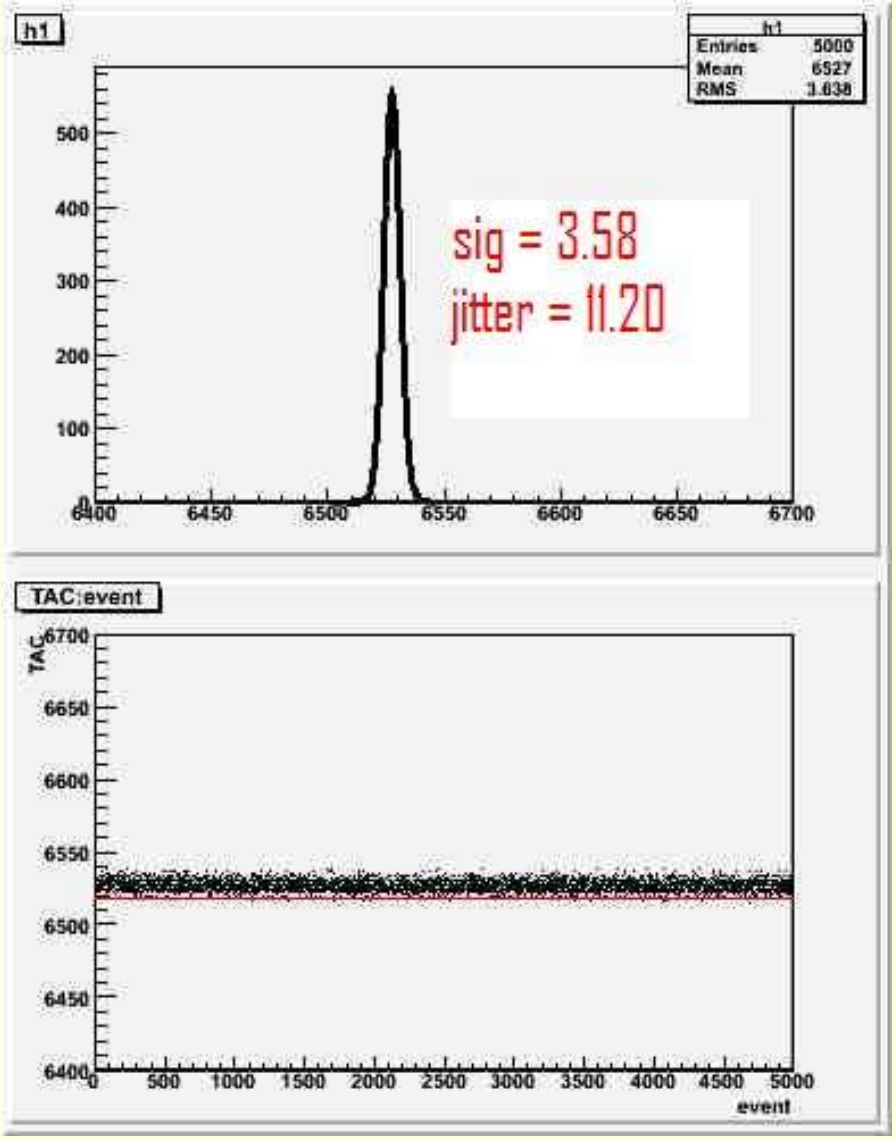

Run: 719

ND filter: 1.8

Npe: ~40 (this is with the assumption of 6x10^5 gain)

Results

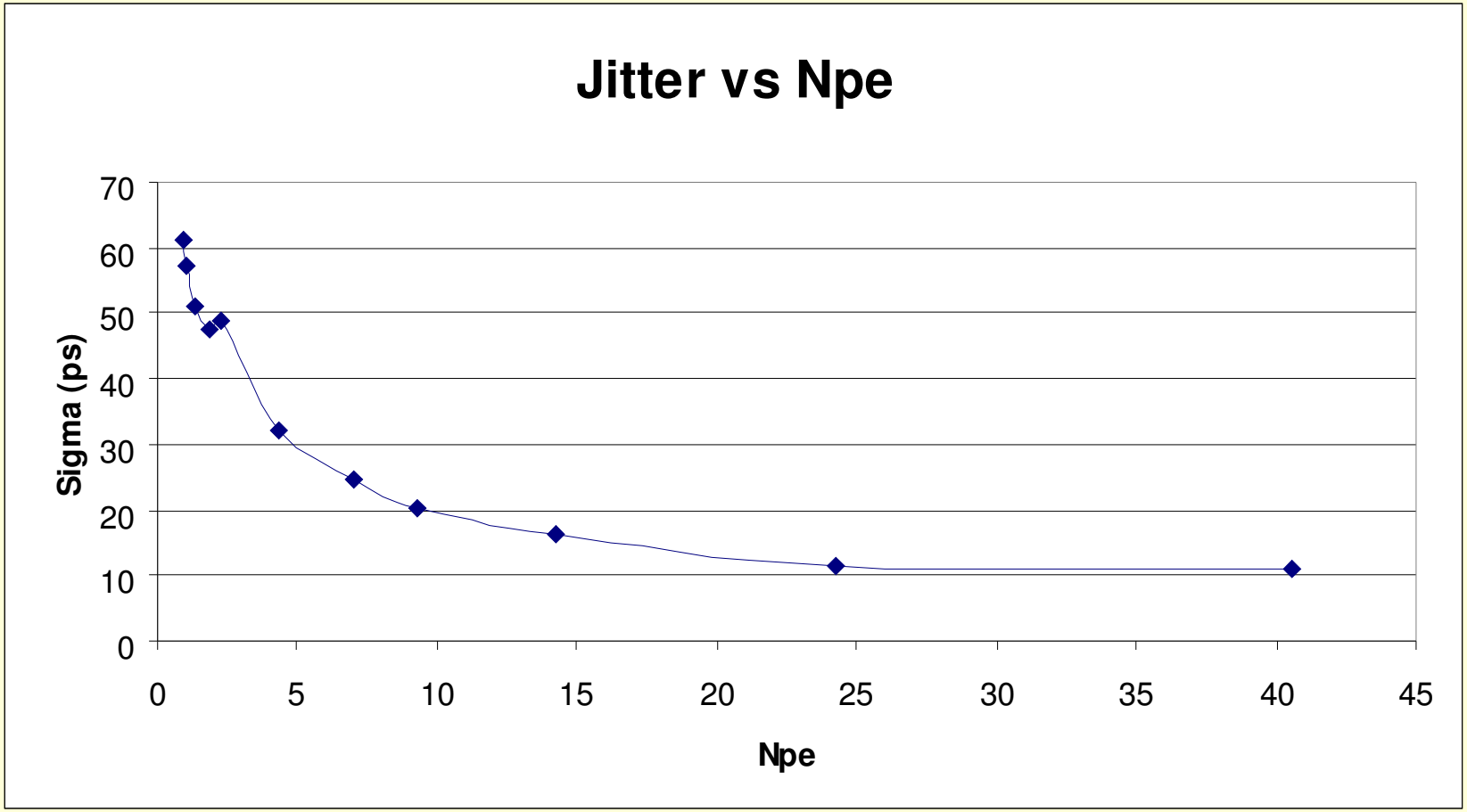
Jitter vs Npe
Sigma (ps)
70
60
50
40
30
20
10
0
0
5
10
15
20
25
30
35
40
45
Npe

Jerry's results

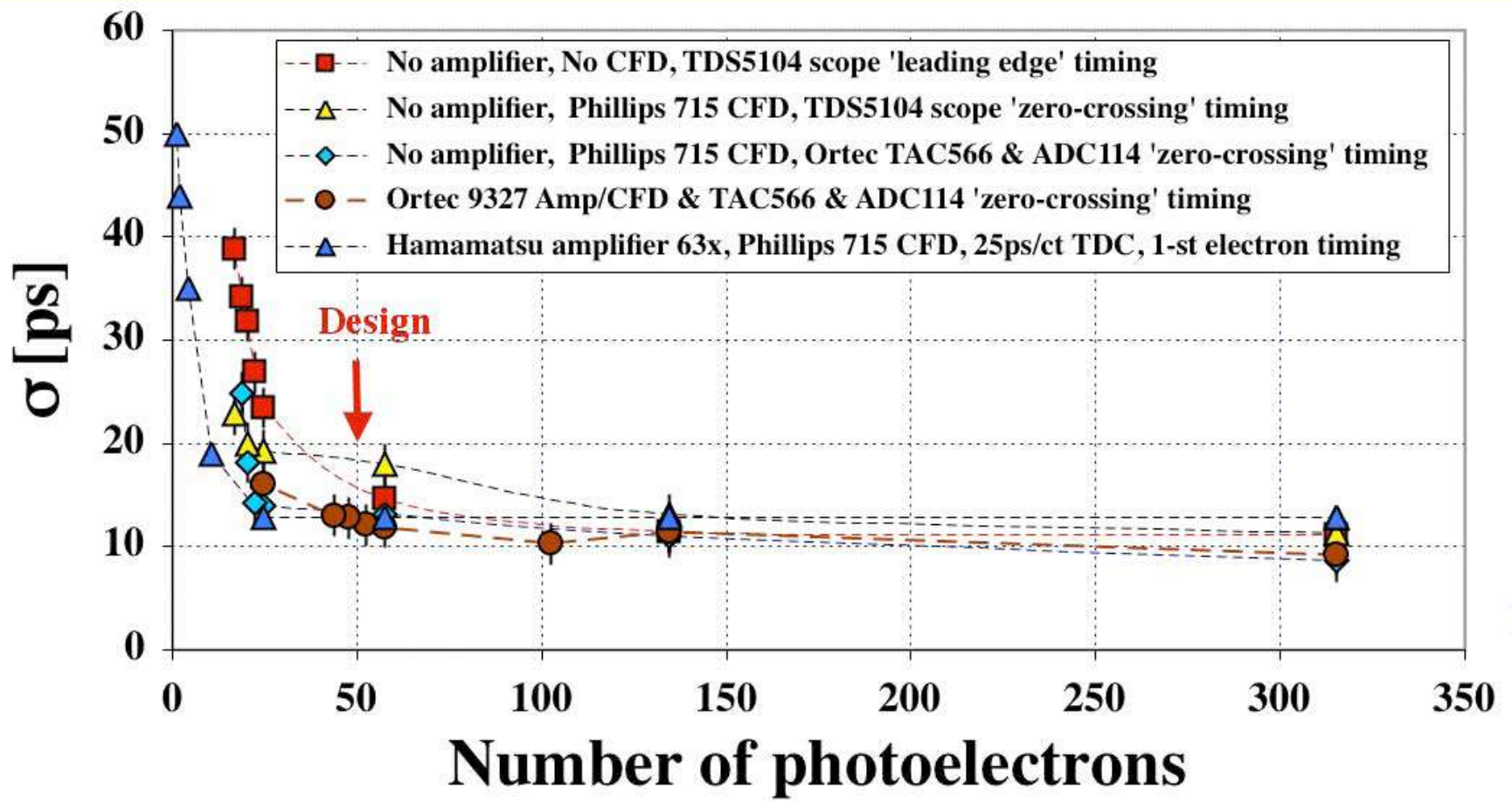

Future Work

- Use one MCP as the start and one MCP as the stop for the TAC.
  - Waiting on new equipment from Ortec to arrive.
    - 9327 CFD
    - 2nd High Voltage
- Gain Measurement
  - Use the Rabbit test stand, higher resolution.
  - Find Npe then calculate the gain at different voltages.
  - Useful for new tubes.
- Get New MCP