An Introduction to PET Electronics

William W. Moses
Lawrence Berkeley National Laboratory
February 28, 2009

Outline:

- **PET Electronics Requirements**
- **PET Electronics Trends**

- **This work was supported in part by the U.S. DOE (contract No. DE-AC02-05CH11231) and in part by the NIH (NIBIB grant No. R01-EB006085).**
- **Thanks to S. Choong, C. Vu, and Q. Peng of LBNL, C. Jackson, S. Buckley, and N. Pavlov of SensL, and M. Casey and J. Young of Siemens Medical Solutions.**

What Is A "PET Event"?
(What Do You Need To Record?)

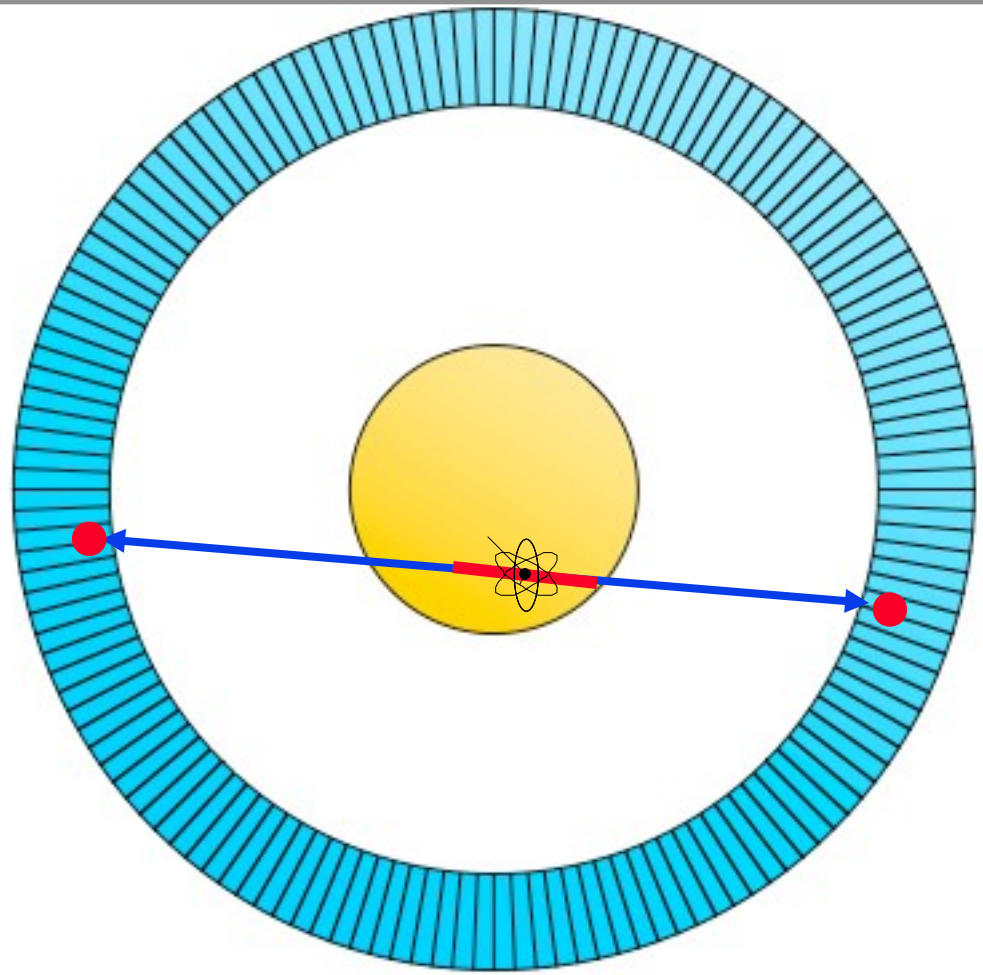

- Non-TOF PET: A Chord — Defined By Two End Points
- Time-of-Flight PET: A Chord and Δt

What Is The Electronics Concept?

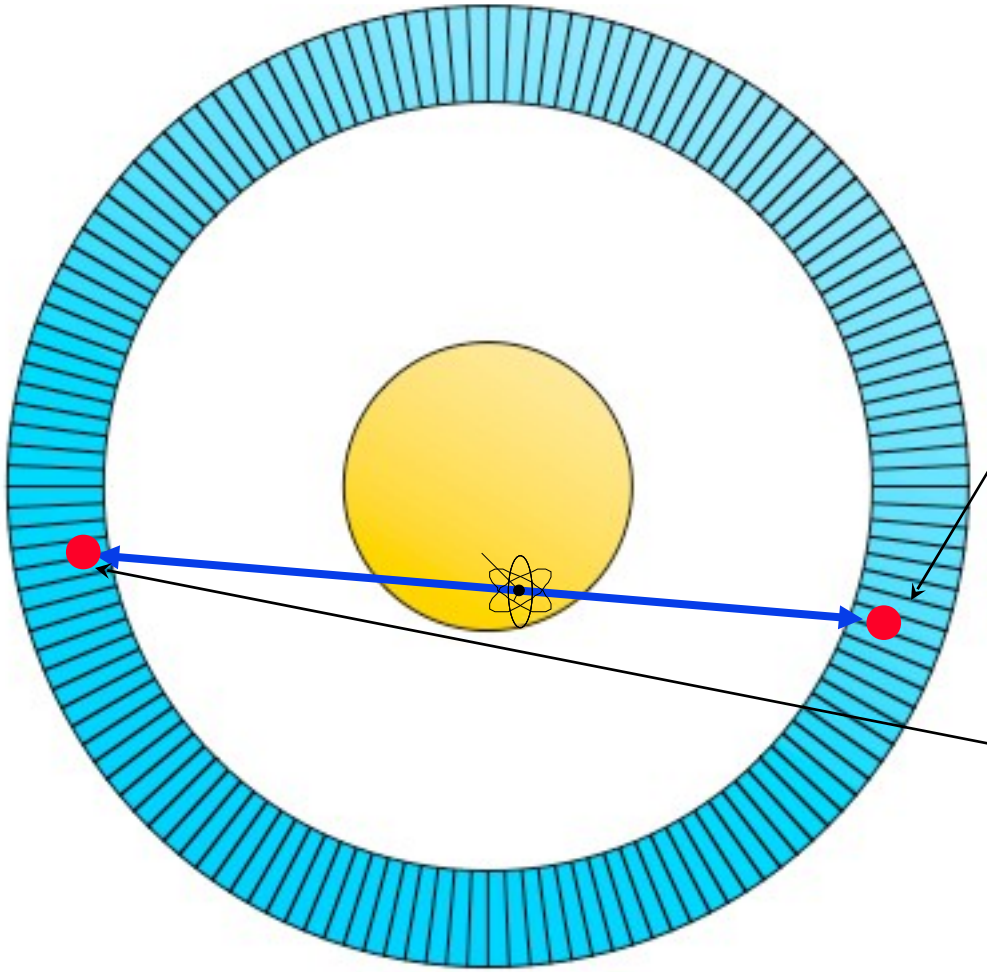

"Singles Event"

- Position (crystal of interaction)
- ~~Time Stamp (arrival time)~~
- ~~Energy Validation (=511 keV?)~~

Δt

"Singles Event"

- Position (crystal of interaction)
- ~~Time Stamp (arrival time)~~
- ~~Energy Validation (=511 keV?)~~

- Identify "Singles Events"
- Find Time Coincidences Between Singles Events w/ Δt
- "Coincident Event" = Pair of Singles Events

Identifying Time Coincidences

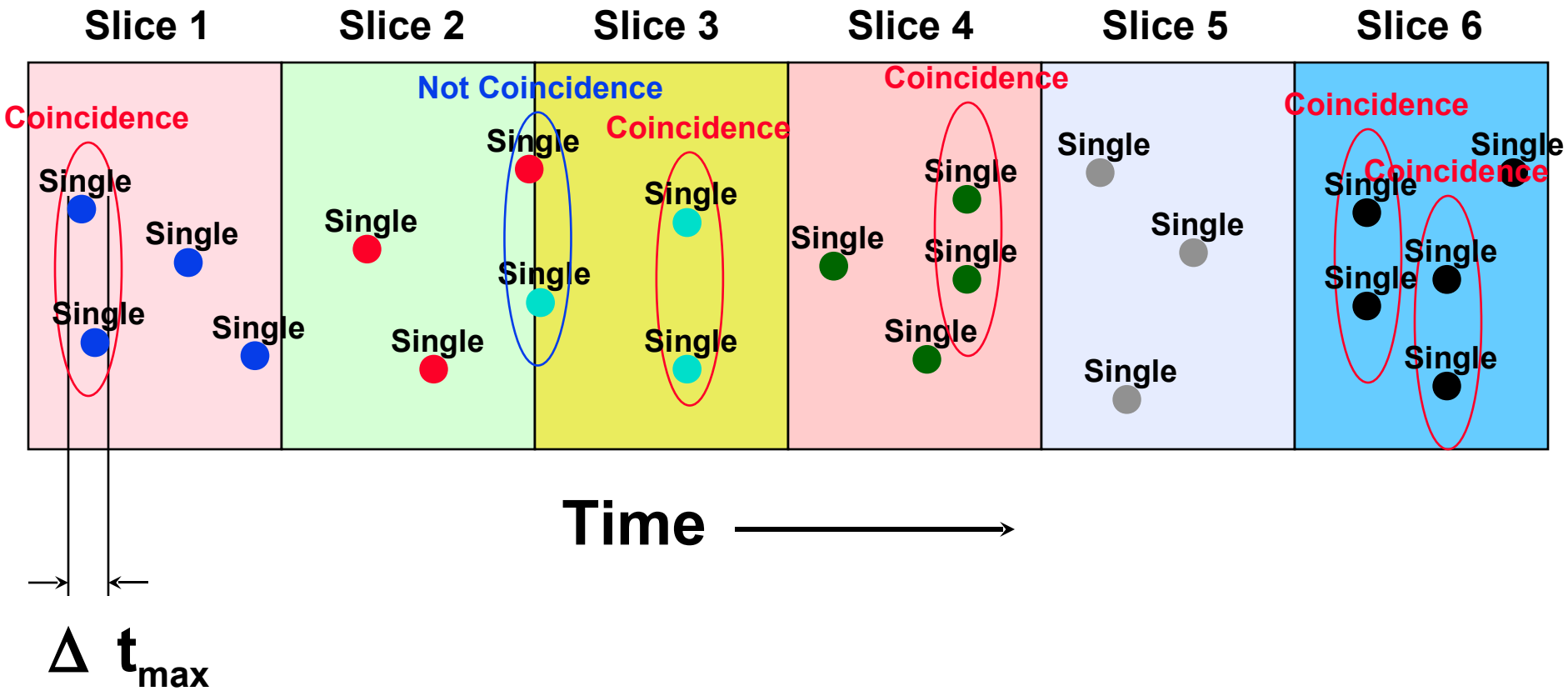

- Break Time Into Slices (100–250 ns / slice)
- Search for Singles Within Δt_{max} (4–12 ns) in Each Slice
- *Greatly* Reduces Combinatorics

Numbers

- 150-200 Detector Modules per Camera
- 100 kHz Typical Singles Rate per Module
- 1 MHz Maximum Singles Rate per Module
- 1 MHz Typical Coincidence Rate per Camera
- 4 MHz Maximum Coincidence Rate per Camera

- Low Singles / Coincidence Ratio
- Low Occupancy in Each Detector Module

⇒Multiplex Singles Events

PET Detector Module

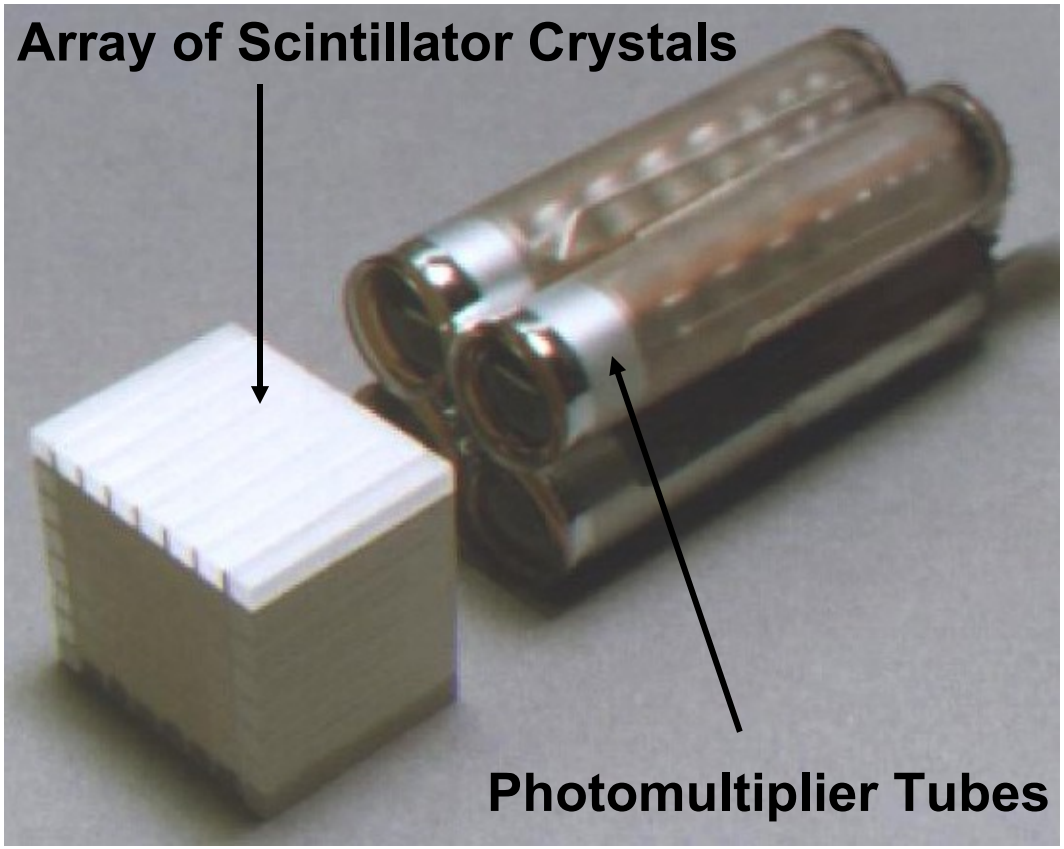

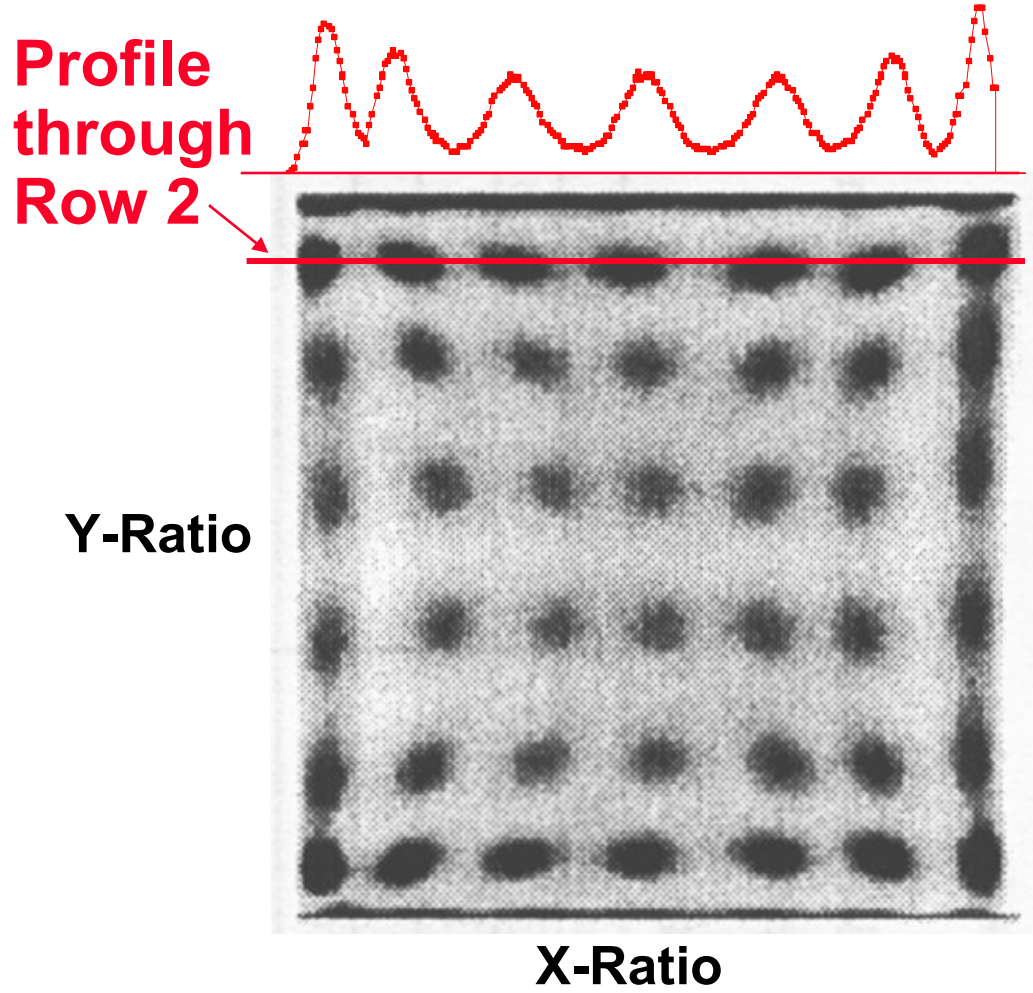

Decode Crystals Using Anger Logic (Light Sharing)

Position Identification

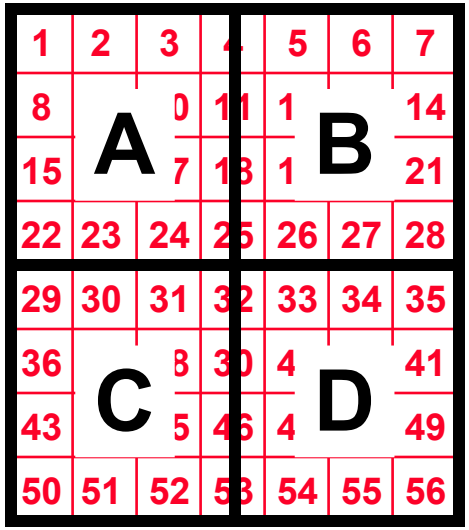

$$E=A+B+C+D$$
$$Y=(A+B)/E$$
$$X=(B+D)/E$$

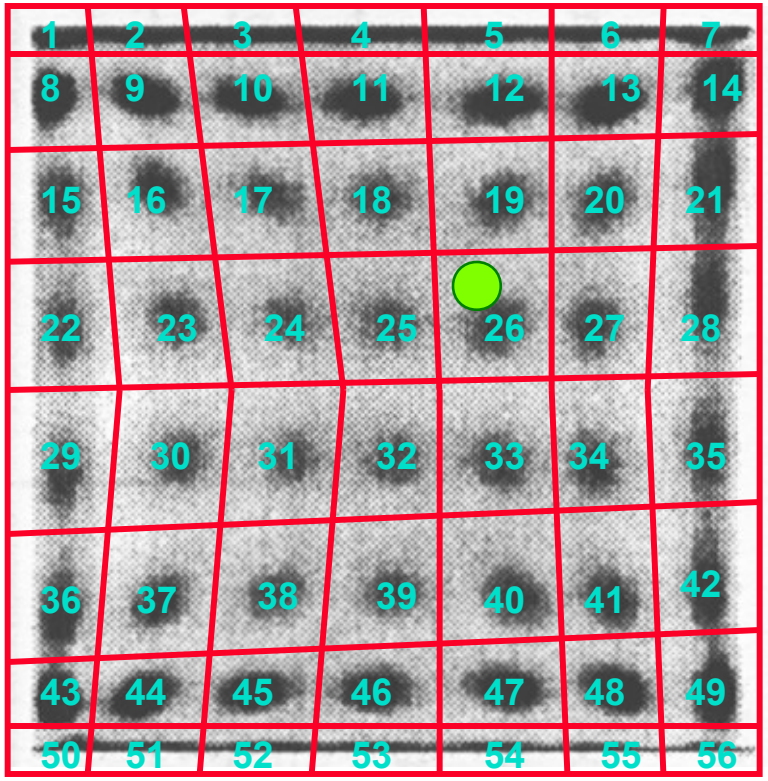

Y

X

- Identify Crystal of Interaction Using Lookup Table
  - Position Given by Crystal ID

Energy Validation

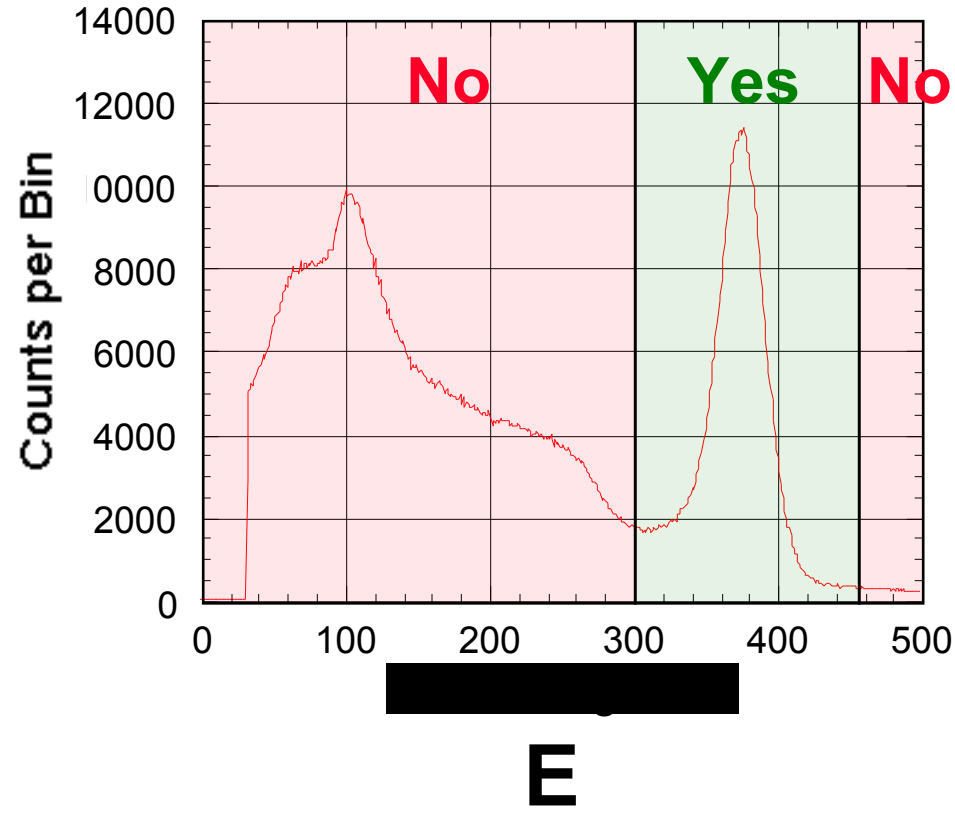

- Yes/No Decision Based on Measured Energy
- Individual Thresholds for Each Crystal
- Implemented Using Lookup Table

Time Stamp

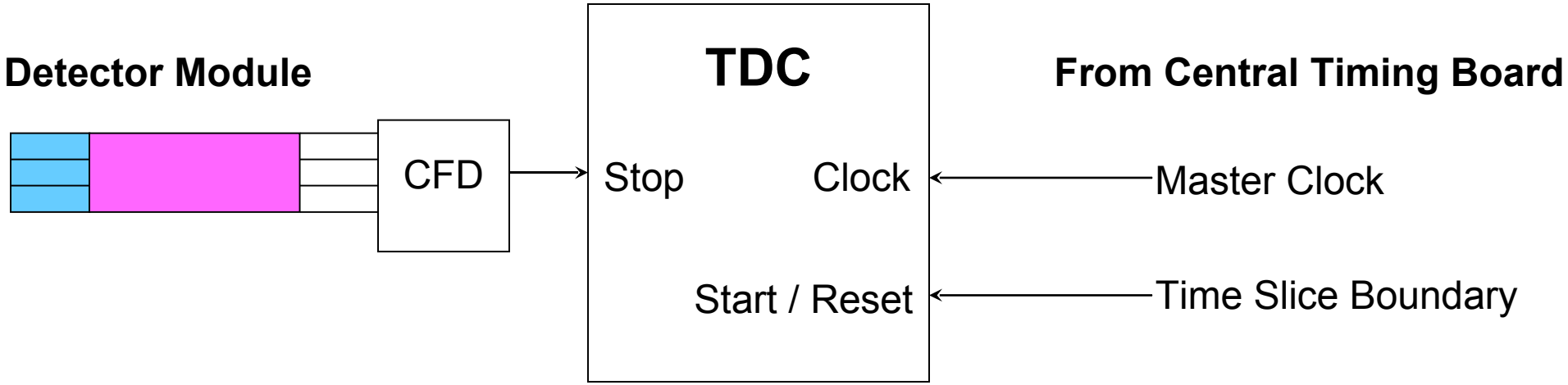

- "Raw" Time Stamp is Digitized Time Since Last Time Slice Boundary
- Each Crystal Assumed to Have a Different (But Constant) Propagation Delay
- Propagation Delays Measured w/ Positron Source and Stored in a Lookup Table
- Correction Factor Added to "Raw" Time

Typical Front End Architecture

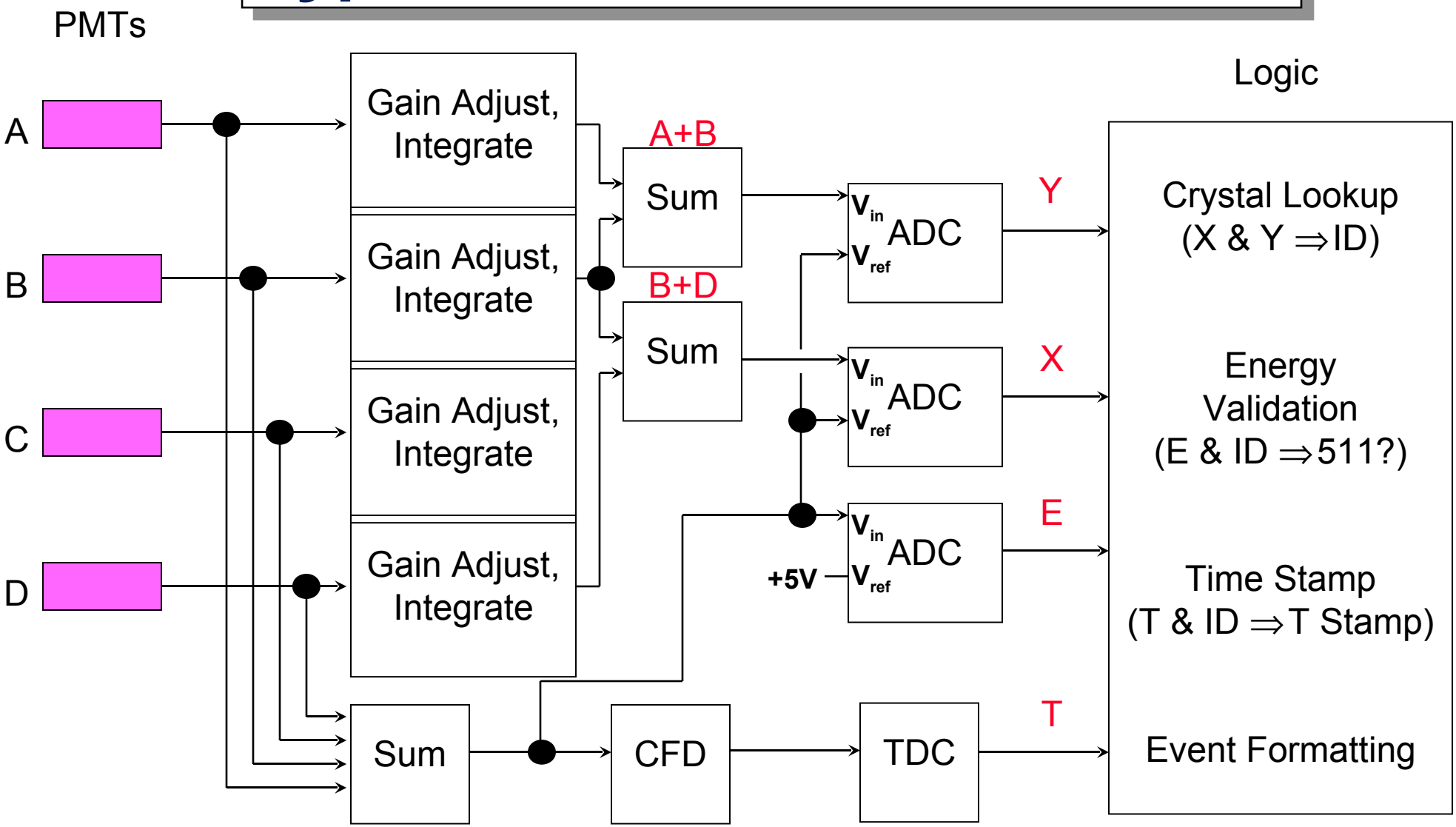

Corrections Done In Real Time, Outputs Singles Events

Implementation (~1995)

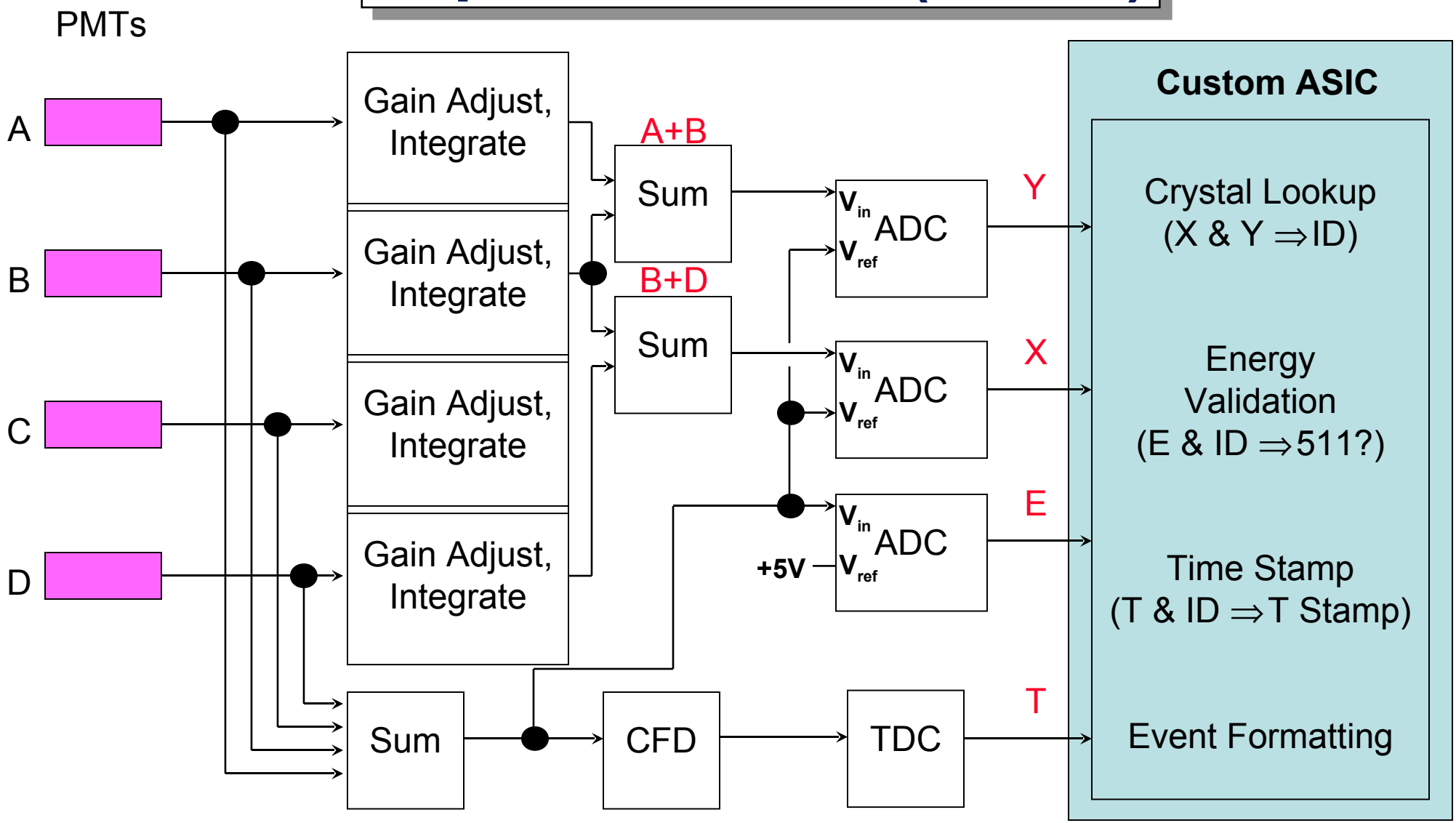

Analog Done w/ Discretes, Digital Done w/ Custom ASIC

Implementation (~2000)

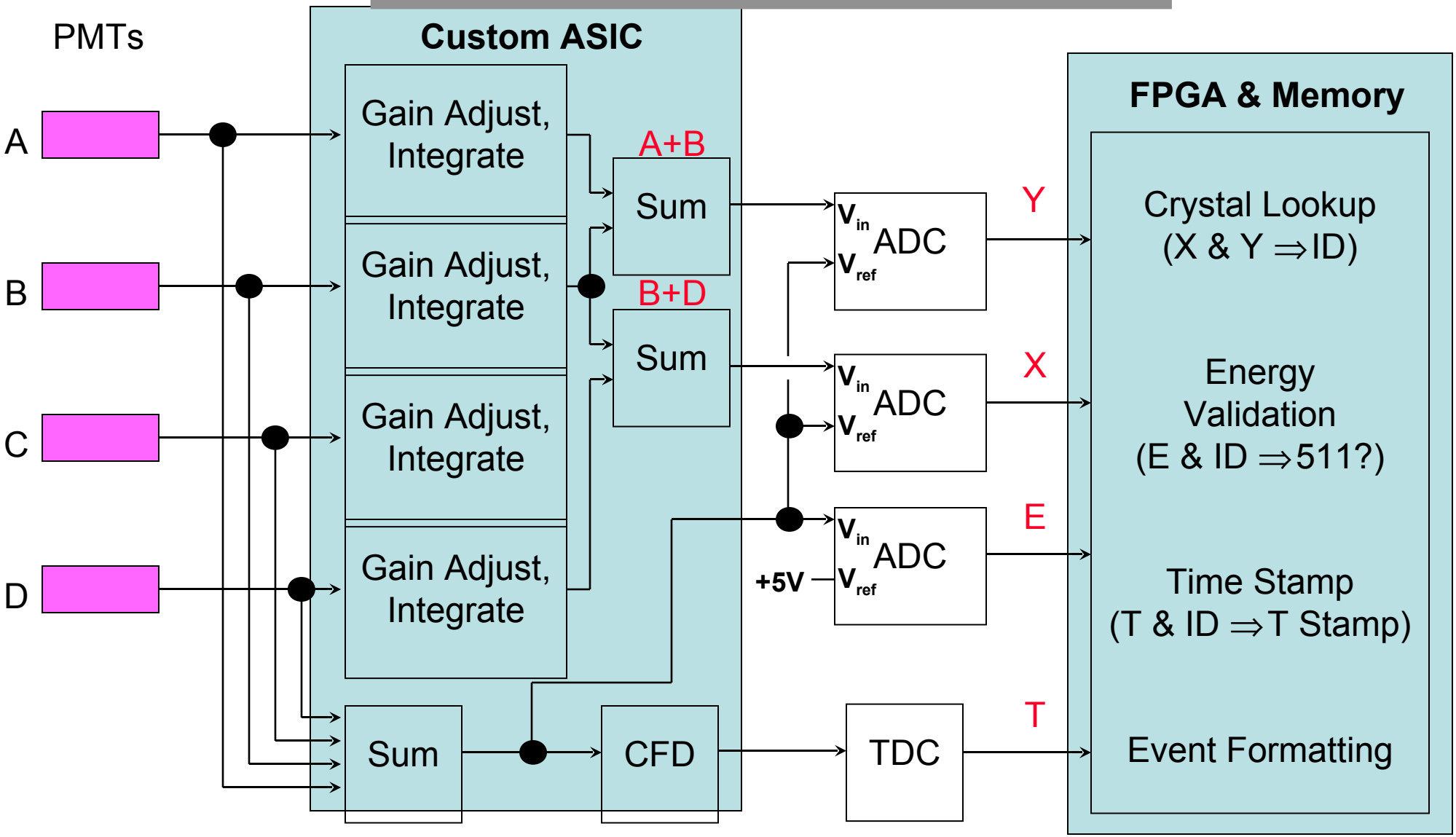

Analog Done w/ Custom ASIC, Digital Done w/ FPGA

Implementation (~2005)

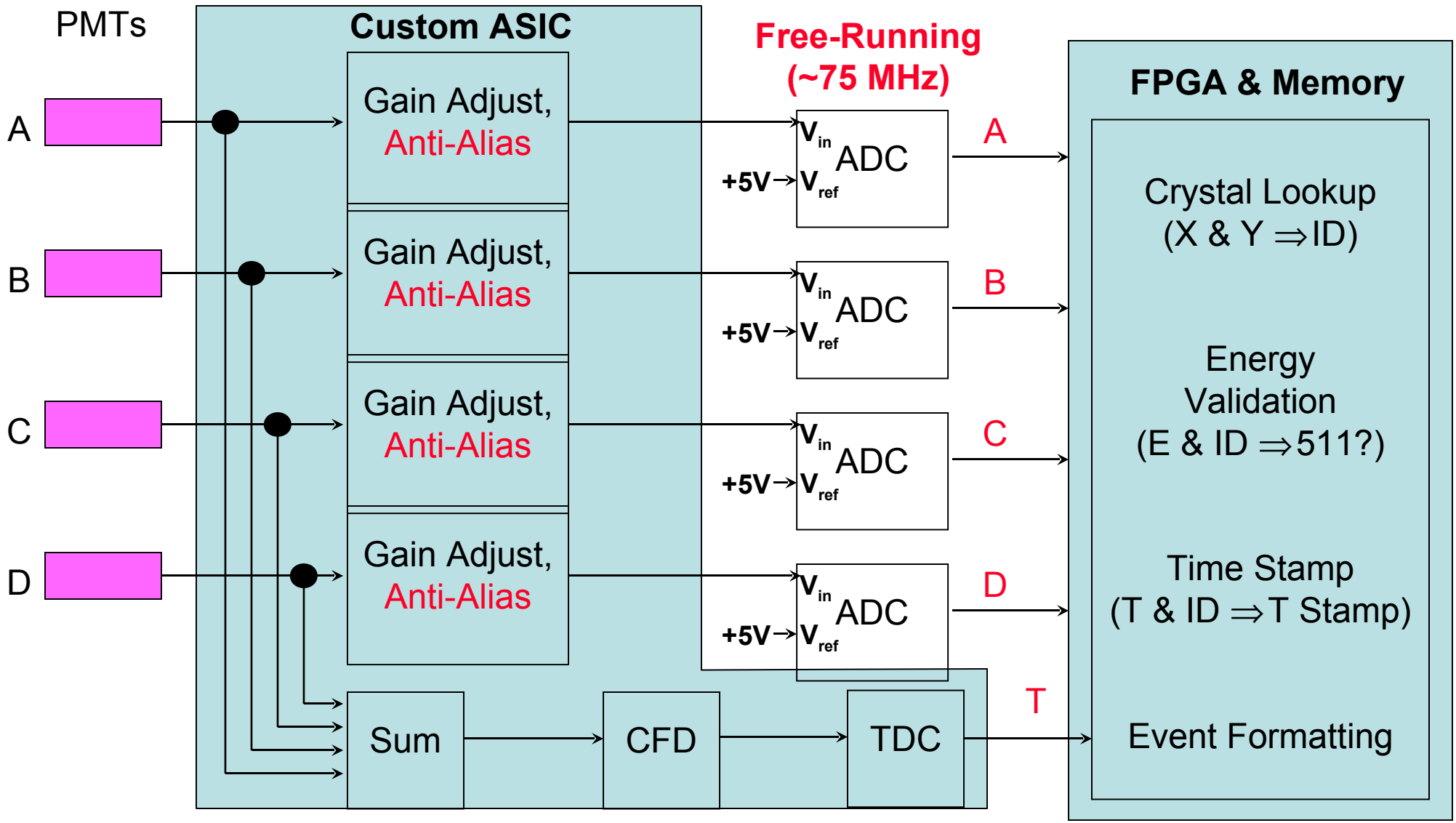

Op-Amp⇒Free Running ADC, More Digital Done w/ FPGA

OpenPET Implementation (~2010)

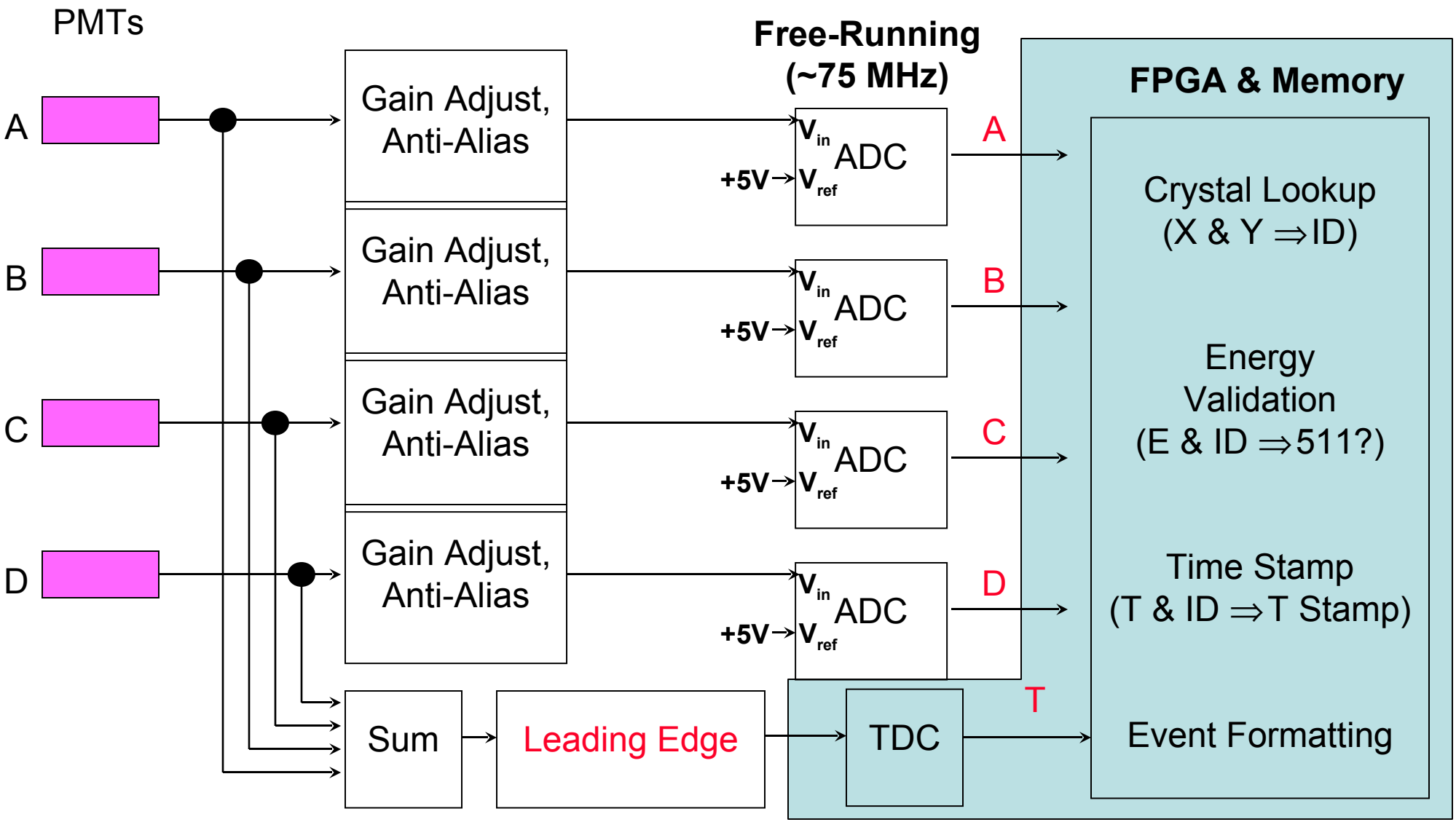

Analog Done w/ Discrete, *More* Digital Done w/ FPGA