Argonne NATIONAL LABORATORY

... for a brighter future

DOE Review 2007

AWA Facility Update, High Gradient Wakefield Generation, and Future Upgrades

Manoel Conde, Sergey Antipov, Felipe Franchini, Wei Gai, Feng Gao, Chunguang Jing, Richard Konecny, Wanming Liu, Jidong Long, John Power, Haitao Wang, Zikri Yusof

Argonne Wakefield Accelerator Group

High Energy Physics Division

April 25 – 27, 2007

U.S. Department of Energy

UChicago Argonne LLC

A U.S. Department of Energy laboratory managed by UChicago Argonne, LLC

Outline

- Description of AWA Facililty.
- Wakefield structures built and tested. Measurements and simulations.
- List of next experiments to be performed.
- Plans for Facility upgrades.

AWA Drive Beamline

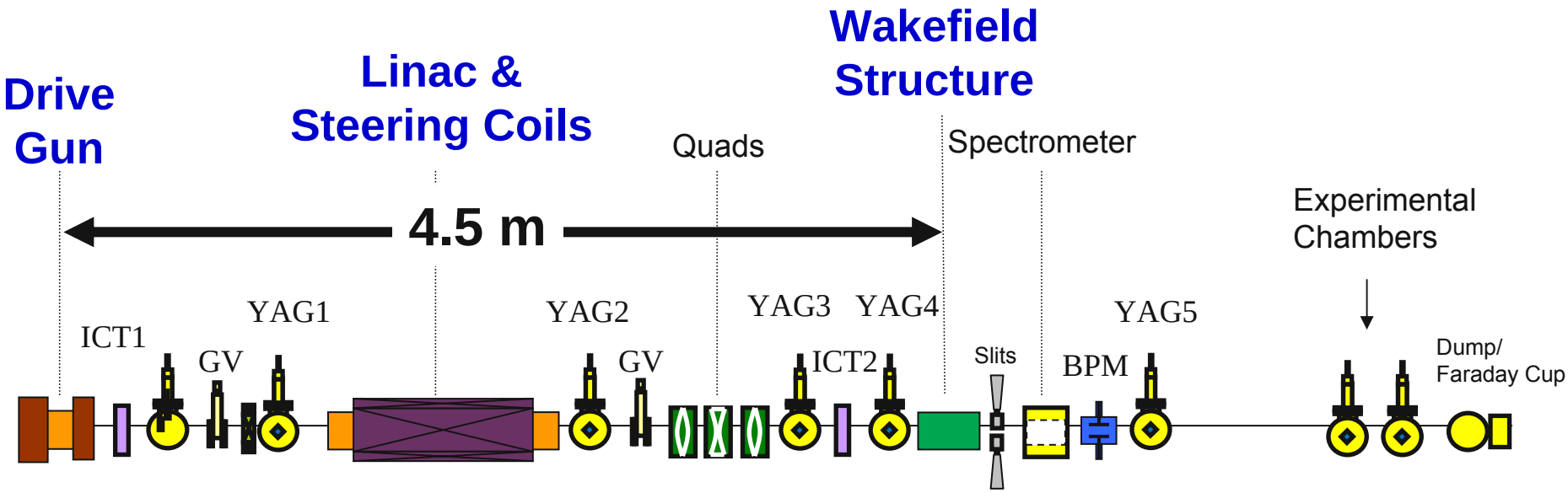

Single bunch operation

- Q=1-100 nC
- Energy=15 MeV
- High Current = 10 kAmp

Bunch train operation

- 4 bunches x 10 nC
- 64 bunches x 50 nC → 50 ns long (future)

AWA Electron Beam

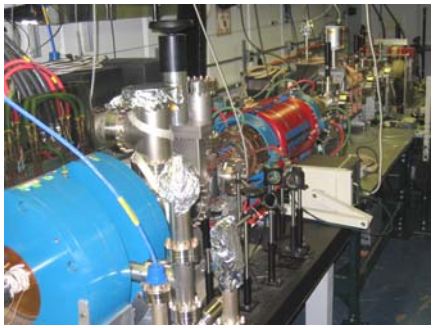

Drive Gun

- 1 ½ cell, L-band (1.3 GHz)
- 12 MW yielding 80 MV/m on cathode
- 8 MeV electron bunches with 1 -100 nC
- Bunch length: 2 mm (rms)
- Emittance < 200 mm mrad (with 100 nC)
- Base pressure: 4×10^{-10} Torr
- Mg photocathode (Cs_2Te cathode under development)

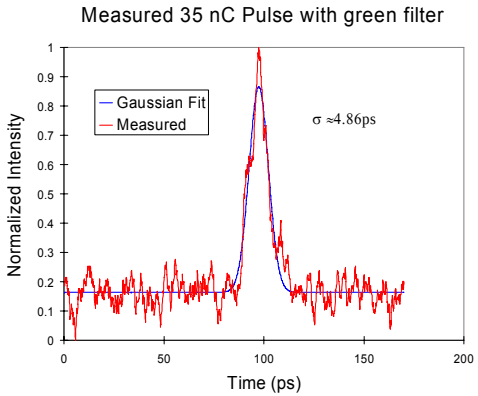

Linac Structure

- Boosts energy to 15 MeV
- Large irises to minimize wakefields

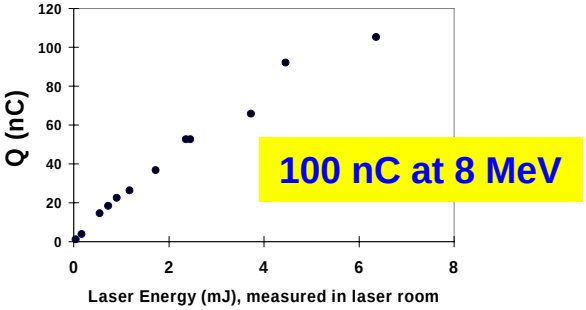

AWA Sub-systems

Laser System

- Spectra Physics Tsunami oscillator, Spitfire regenerative amplifier, and two Ti:Sapphire amplifiers (TSA 50):
  - 1.5 mJ at 248 nm
  - 6 – 8 ps FWHM
  - timing stability: < 1ps rms
  - amplitude stability: ± 3% rms at high energy, and ±1% at lower energy.
- If use Excimer amplifier:
  - 15 mJ at 248 nm

RF System

- Single klystron: 1.3 GHz, 24 MW, 8μs

Previous AWA Beamlines: Two-Beam-Accelerator Configuration

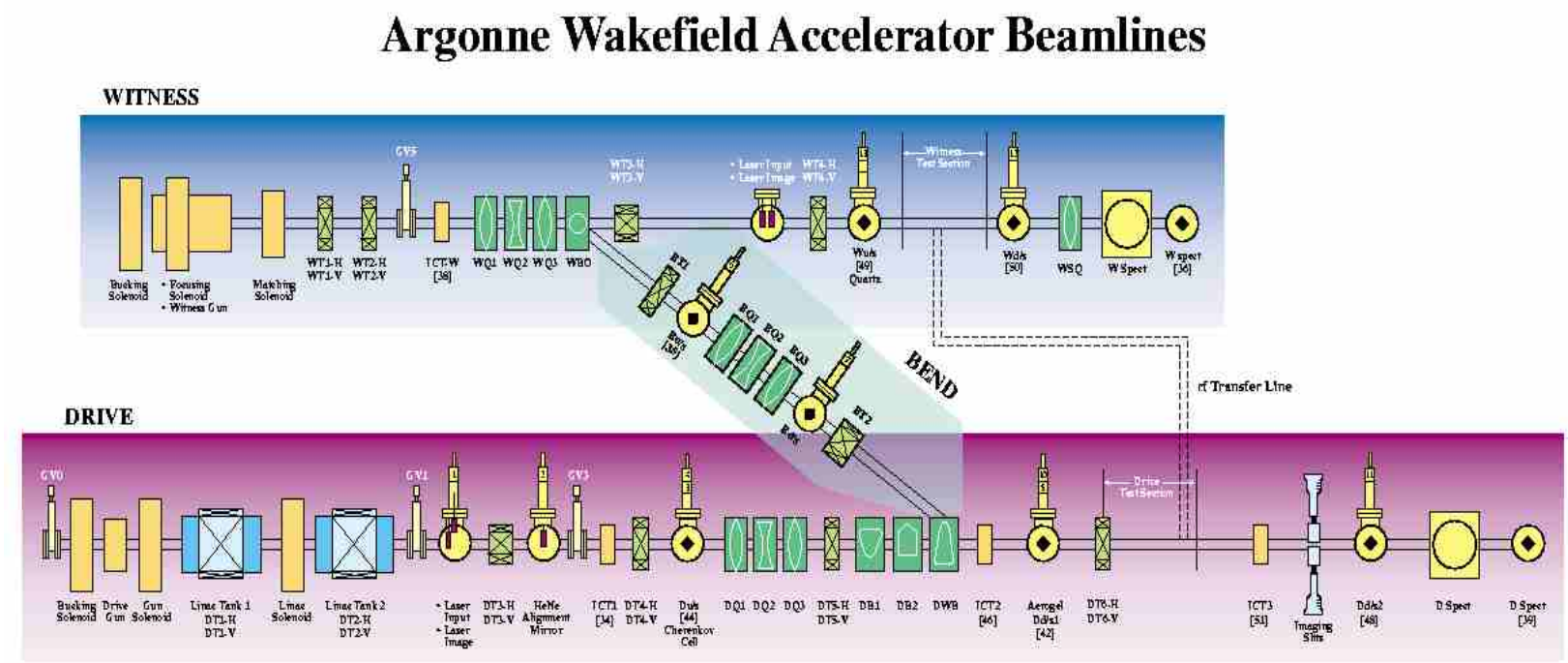

After successfully upgrading the Drive Gun, the AWA Group now aims at restoring the TBA capability.

Wakefield Measurements: Structure C10.0-S101.6

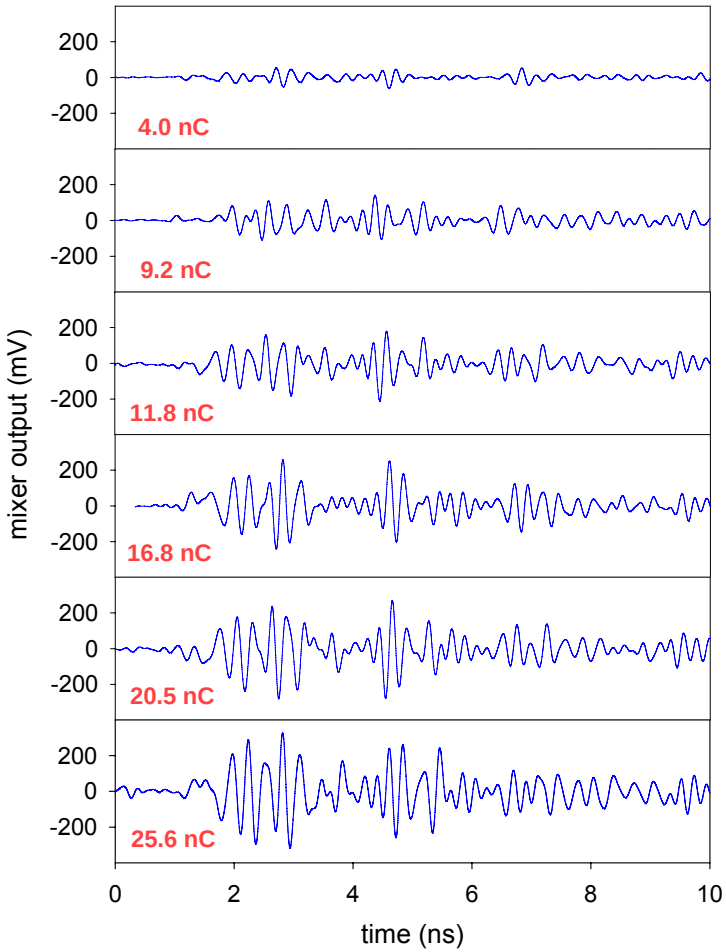

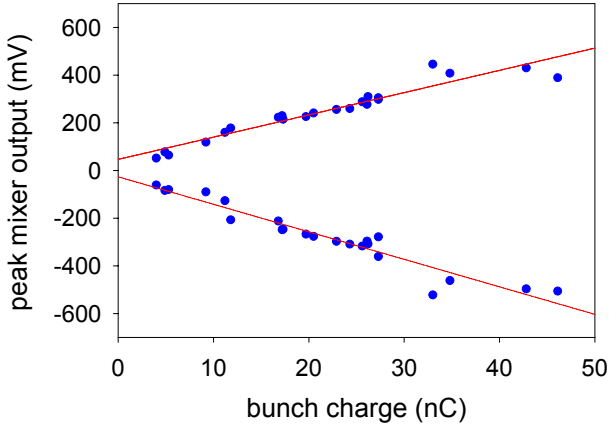

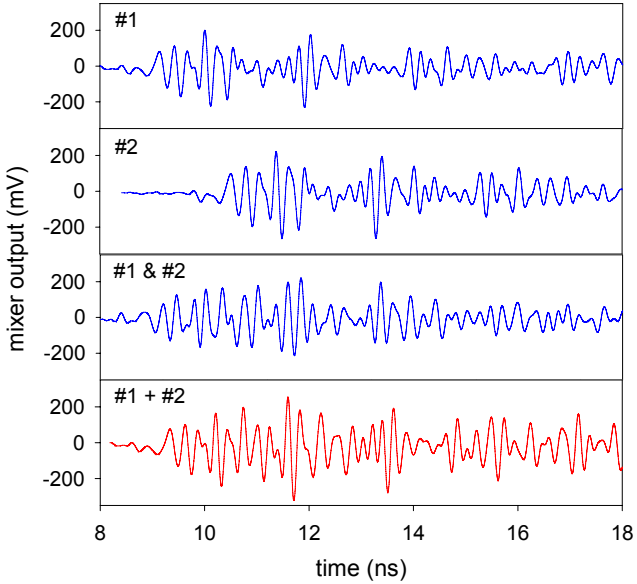

43 nC → 21 MV/m

MAFIA Simulation of Structure C10.0-S101.6

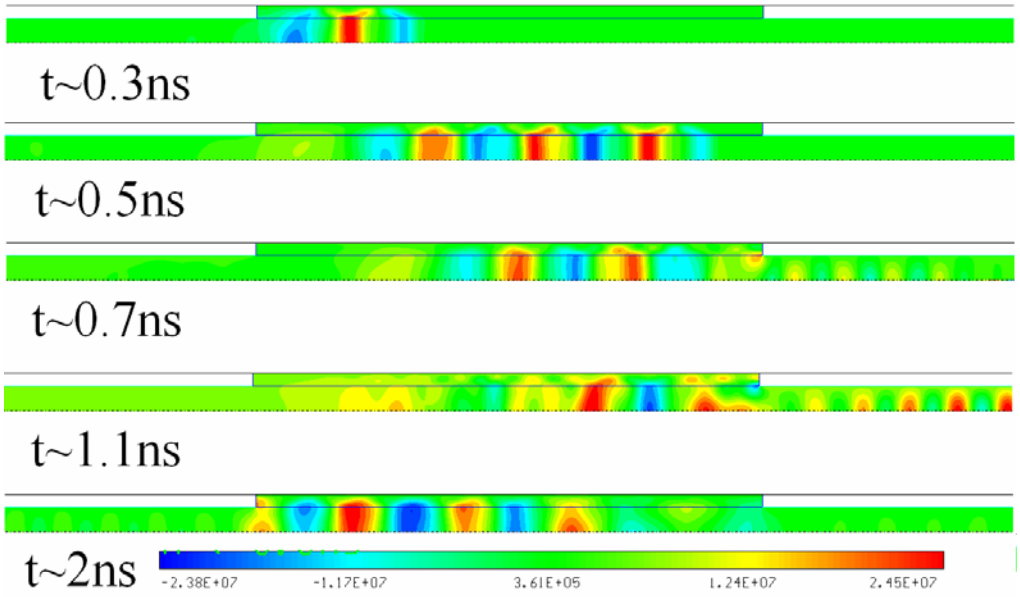

Snapshots of wakefield amplitude

Wakefield Measurements: Structure C10.0-S23.0

Measured and simulated E_r probe signals

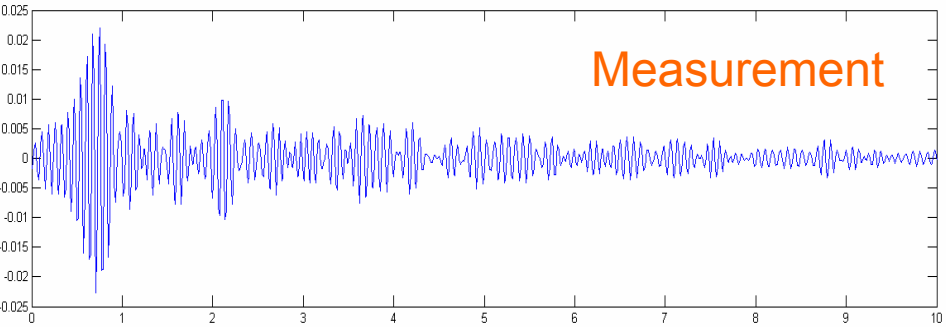

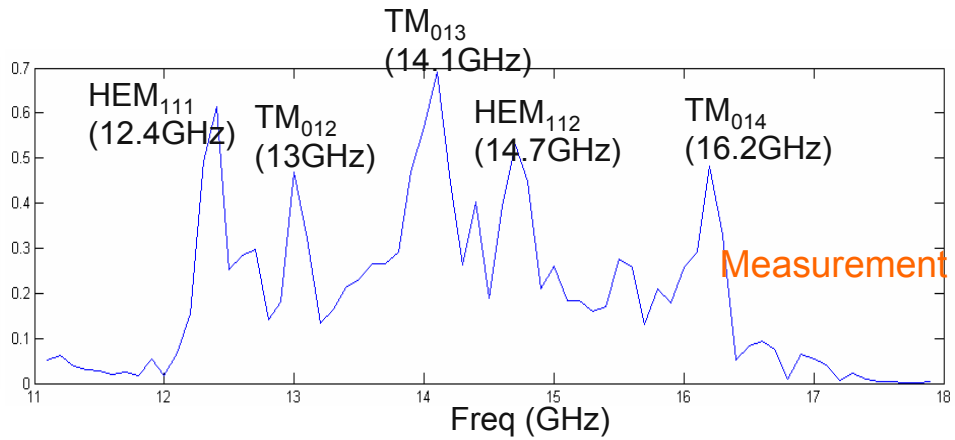

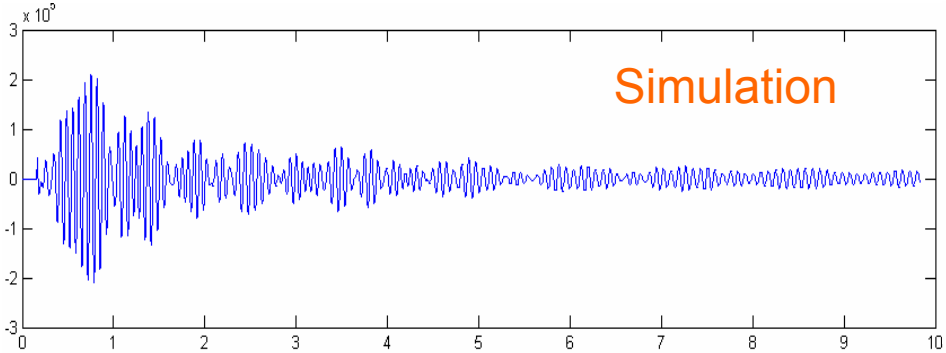

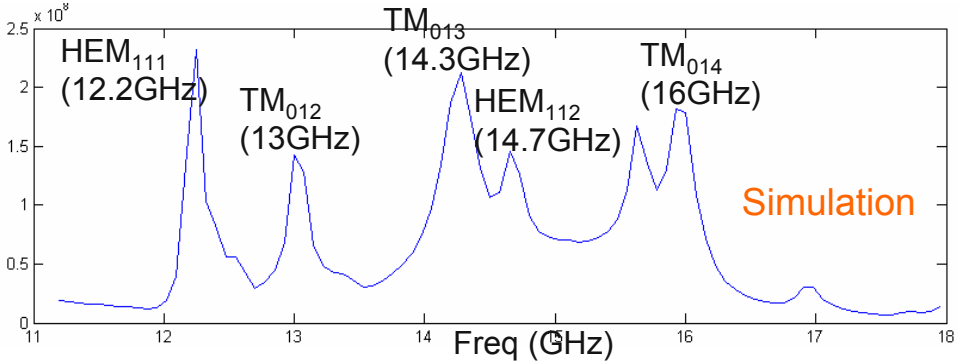

86 nC → 43 MV/m

Wakefield Measurements: Structure C5.5-S28.0

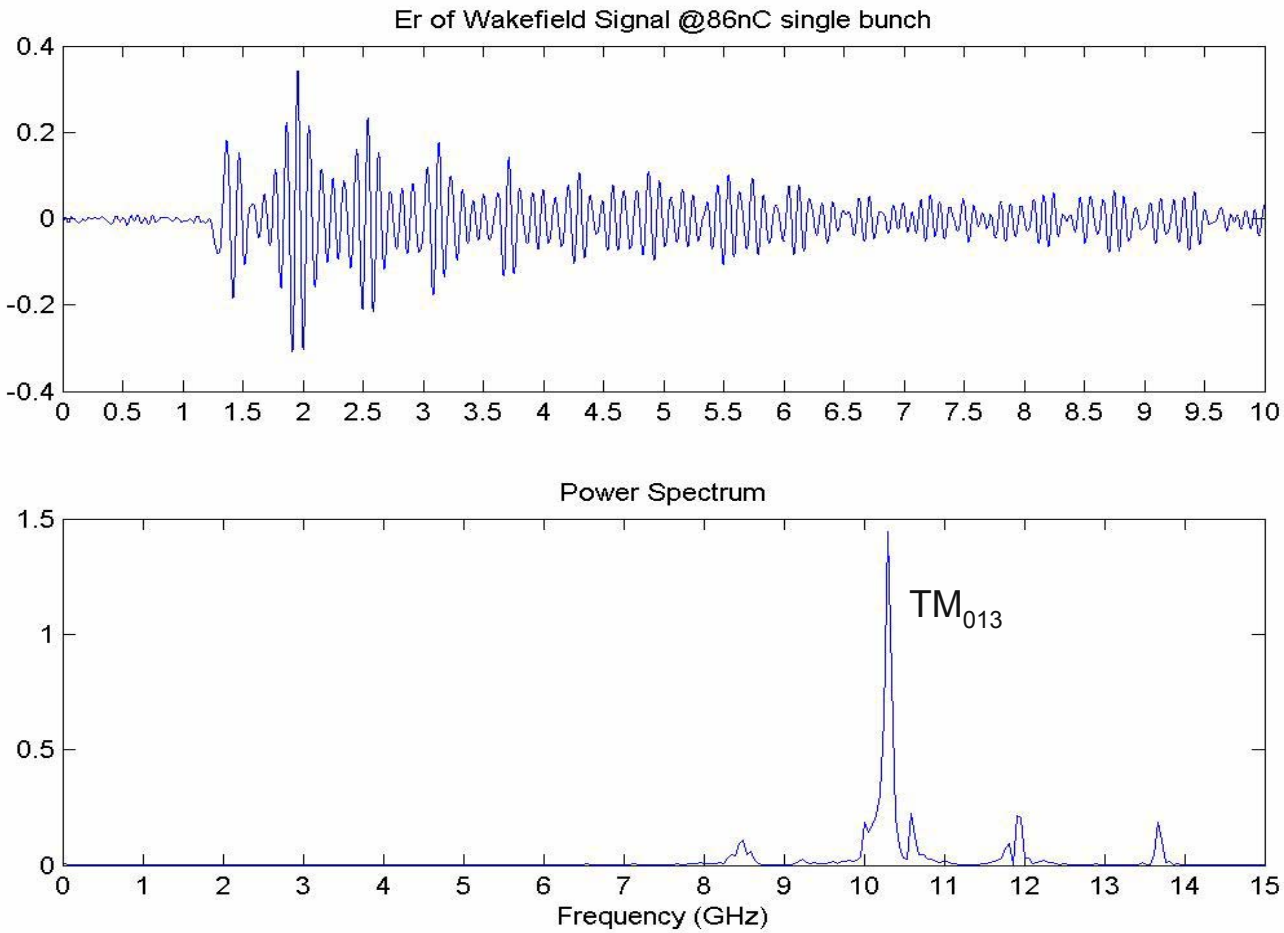

86 nC → 78 MV/m

Wakefield Measurements: Structure Q3.8-S25.4

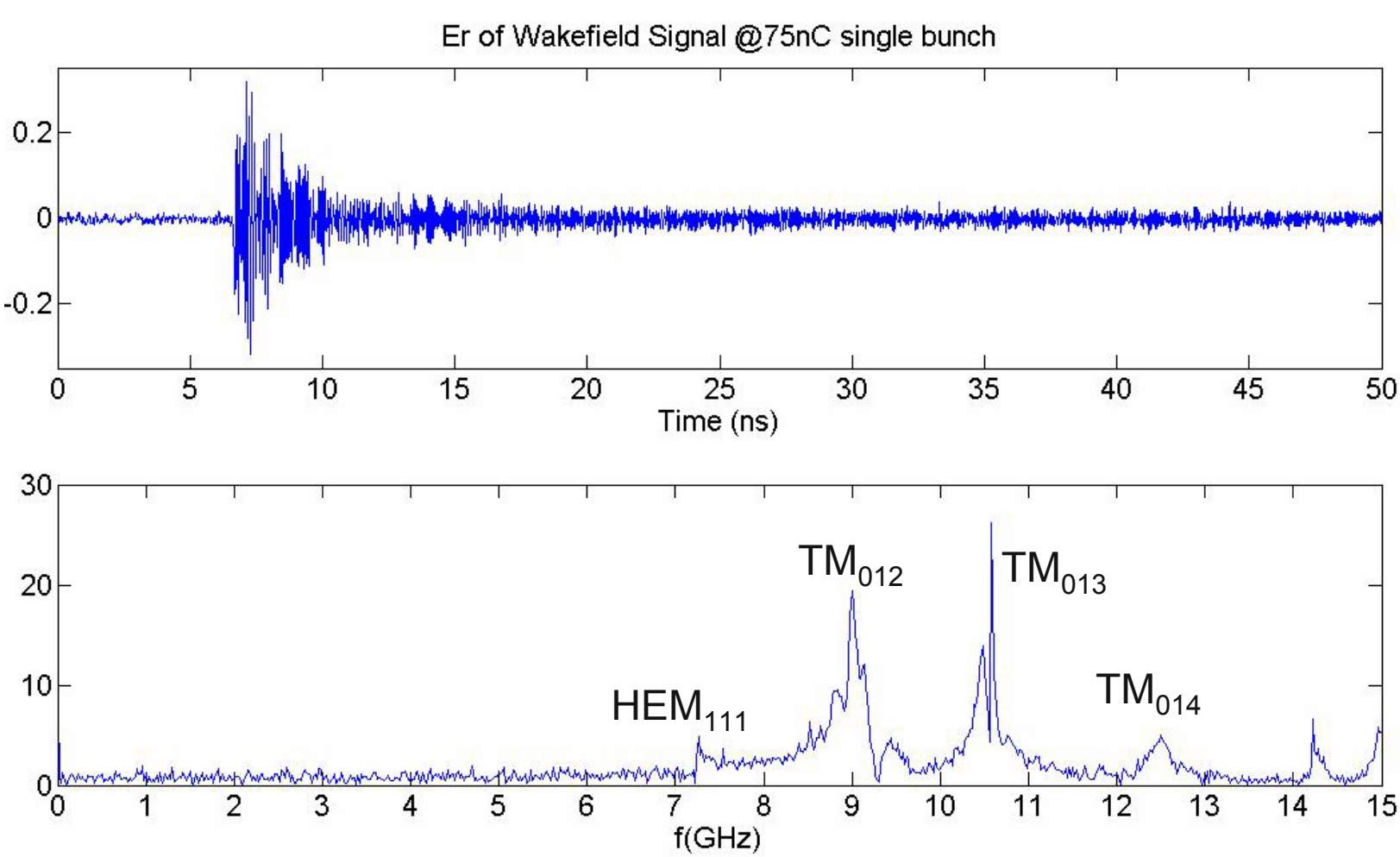

75 nC → 100 MV/m

Dielectric Loaded Structures at AWA: Steadily Increasing Accelerating Gradients

structure name	material ε	a (mm)	b (mm)	l (mm)	Freq. dom. (GHz)	peak grad./nC (MV/m)	transm. q (nC)	highest grad. (MV/m)
C10.0-S101.6	cordierite 4.76	5.0	7.49	101.6	14.1	0.45	46	21
C10.0-S23.0	cordierite 4.76	5.0	7.49	23.0	14.1	0.50	86	43
C5.5-S28.0	cordierite 4.76	2.75	7.49	28.0	9.4	0.91	86	78
Q3.8-S25.4	quartz 3.75	1.9	7.49	25.4	8.6	1.33	75	100
C3.8-S25.4	cordierite 4.76	1.9	7.49	25.4	10.0	1.25		
Q3.0-S25.4	quartz 3.75	1.5	7.49	25.4	8.3	1.38		
C3.0-S25.4	cordierite 4.76	1.5	7.49	25.4	9.7	1.50		

Other Experiments Using the AWA Facility in the Near Future

- Power extractor
- Development of beam diagnostics (pepper-pot, UMD OTR)
- Metamaterial structures
- High brightness / emittance exchange
- Dark current studies in RF gun cavity
- Enhanced transformer ratio
- Beam dynamics (NIU)
- Possibly more AIRFLY measurements

Facility Upgrades

- New rooms for RF and cathode preparation
- Installation of RF gun dedicated to dark current studies
- Cesium Telluride photocathodes
- Generation of high charge bunch trains
- Construction of new RF gun (G3)
- Construction of new RF station + RF power distribution
- Additional linac structures

New RF Power Station

More RF power is needed:

- to power new RF gun / witness beam
- to allow propagation of higher charge through wakefield structures

Several components already available:

Item	Lender (THANK YOU !)	Manufacturer
Klystron	LANL	Litton
Klystron socket	LANL	Litton
Solenoid	LANL	Litton
HV charging supply	ANL-HEP	Lambda/EMI
Thyratron	ANL-IPNS	EEV
Thyratron driver	ANL-IPNS	EEV
RF power circulator	ANL-HEP	Ferrite

New RF Power Station (cont.)

… but some more are needed:

Item	Cost (k$)	Supplier
HV pulse transformer + tank	18 / 25	Stanganese
PFN capacitors	12	GE
PFN inductors	4	ANL
RF driver	75 (optional)	QTRWV
Transformer 480/220/110 V	2	GE
Solenoid power supplies	5	HP
Control chassis	20	ANL
Hose, piping, plumbing	2	
Breakers/relays	1	Square D
Solenoid lead shield	2	
HV monitors	2	Ross
Pulse current monitors	2	Pearson
Transformer oil	2	Shell

Simplified PFN Diagram

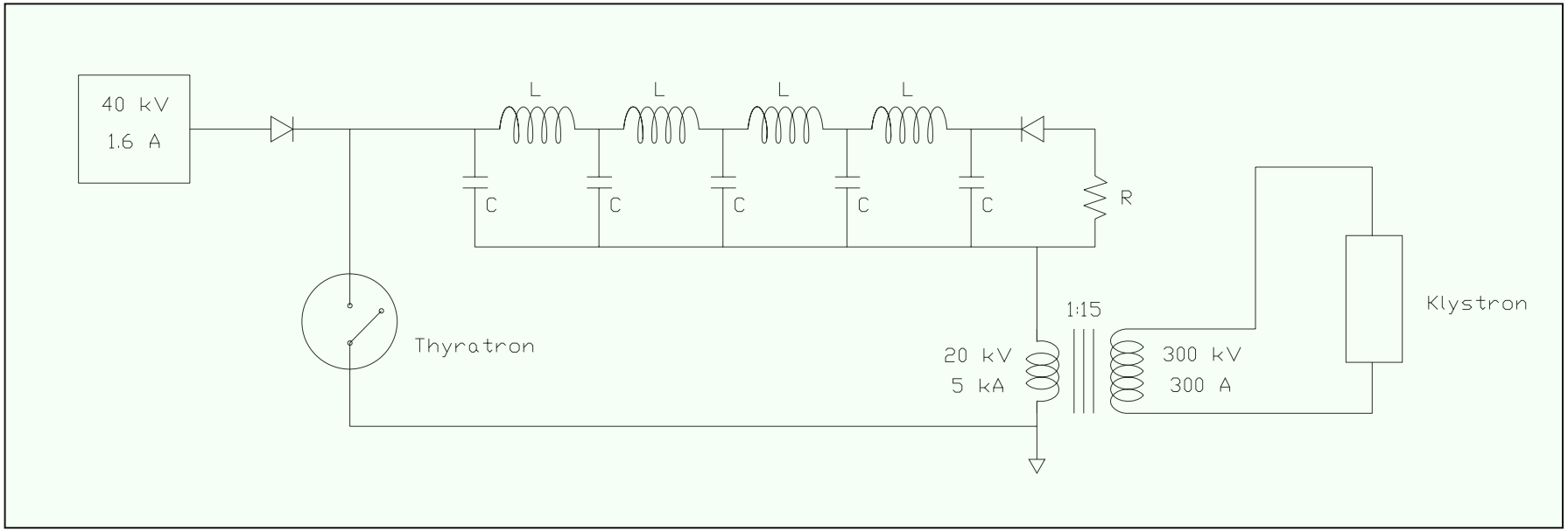

Need new HV pulse transformer for Litton Klystron:

- turns ratio of transformer that accompanied Klystron is not high enough
- available “Thales transformer” is meant for long RF pulses, consequently its time response is too long.

Construction and Commissioning of New RF Station

- Litton klystron has been tested for vacuum and filament integrity.

- Need to verify Litton klystron power generation using small fraction of Thales klystron output as RF drive.

- Power splitters and phase shifters will need to be rearranged to distribute RF power from two klystrons.

New Waveguide Layout

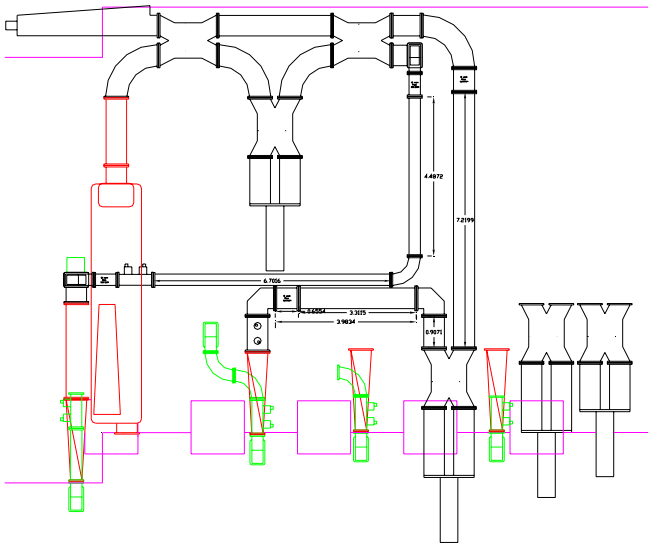

lower level

(Thales)

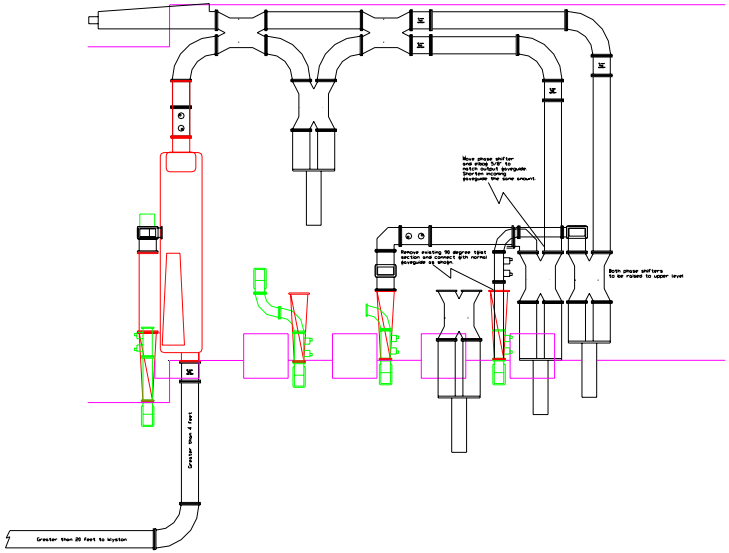

upper level

(Litton)

This setup may need to be redesigned if one wishes to make provisions for a future extra linac tank.