DHCAL Readout Back End

Eric Hazen,
John Butler, Shouxiang Wu

Boston University

Two DCOL Options

- (1) Use CMS-DCC
  - Already exists, so
    - Lower cost? Quicker?
  - Obsolete components
  - Not optimized for DCAL
  - Copper inputs
  - Short supply
  - Complex (mechanics)
  - Complex (firmware)
    - Can use CMS firmware?
  - No slow control/timing
    - Need separate system
- (2) Make new DCOL
  - New design
    - Higher cost? Longer?
  - Current components
  - Optimized for DCAL
  - Fiber inputs
  - Ample supply
  - Mechanically simple
  - Simple firmware
    - Need new firmware
  - Could integrate...
    - ...slow control and timing

Two options (continued)

- (1) Use CMS-DCC
  - Only global trigger due to I/O limitations (?)
- (2) Make new DCOL
  - Could plan more flexible trigger interface

Option (1) Tasks
(recycle CMS board)

- Assumptions:
  - Input can be LVDS, compatible data format
  - Use only global trigger (can change later)
- Tasks (hardware):
  - Fabricate TTC-compatible trigger input
  - Build/test additional modules (required for $1m^3$)
- Tasks (firmware):
  - Modify trigger handling for new input
    - (possibly not required)
- Tasks (software)
  - Write test software and DAQ support code

Option (1) Tasks (cont.)

- Tasks (integration)
- Done by physicists? (with engr. support)
  - (Integrate front-ends with trigger/timing and slow controls)
  - Integrate front-ends CMS-DCC
  - Integrate both with CALICE DAQ
  - Commission entire system

Option (2) Tasks

- Assumptions:
  - Trigger logic is handled externally but each DCOL distributes timing/triggers to detector
  - Duplex fiber handles all comms to each SC
  - Single 6U or 9U module handles 12 SC
- Tasks (preliminary)
  - Write complete specification document
    - Including details of all interfaces and protocols
- Tasks (hardware)
  - Design VME module hardware
  - Fabricate prototype
  - Electrical/functional test prototype

Option (2) Tasks (cont.)

- Tasks (firmware)
  - Implement VME interface
  - Implement slow controls
  - Implement trigger/fast controls
  - Implement front-end readout
- Tasks (integration)
  - Integrate front-ends with trigger/timing system
  - Integrate front-ends CMS-DCC
  - Integrate both with CALICE DAQ
  - Commission entire system

Cost Comparison
(very rough)

- New Design
  - M&S $42k
  - EDIA $46k
  - TOTAL $88k
- CMS-DCC
  - M&S $37k
  - EDIA $26k
  - TOTAL $63k[1] ($82k[2])

[1] build 6 new boards

[2] build 12 new boards

- This is a quick try at an estimate which should not be taken too seriously.
- At first glance, cost is not very different due to high cost of building more CMS modules

Option 1 Details (use CMS-DCC)

Option 1 – CMS DCC			**$64,000**
M&S			**$38,000**
1	Trigger PCB run	$2,000	$2,000
12	Sets trigger PCB parts	$500	$6,000
6	CMS-DCC (new production)	$5,000	$30,000
			$0
EDIA			**$26,000**
5	Design/layout trigger PCB	$400	$2,000
10	Firmware mods (minimal)	$400	$4,000
20	Integration	$400	$8,000
20	Commissioning support	$400	$8,000
10	Port CMS software	$400	$4,000

65 Total man-days

Option 2 Details (new design)

Option 2 – New Design			**$87,800**
M&S			**$41,800**
2	PCB proto run	$5,000	$10,000
2	Sets proto parts	$2,000	$4,000
1	PCB production run	$5,000	$5,000
12	Sets prod. parts	$1,500	$18,000
12	Assembly/test	$400	$4,800
EDIA			**$46,000**
5	Write specification	$400	$2,000
20	Schematic & PCB	$400	$8,000
10	2 proto test	$400	$4,000
5	Rework/redesign	$400	$2,000
5	Firmware - VME	$400	$2,000
10	Firmware - slow control	$400	$4,000
10	Firmware - trigger/fast	$400	$4,000
10	Firmware - DAQ	$400	$4,000
20	Integration	$400	$8,000
20	Commissioning support	$400	$8,000
75	Total man-days		

Unit cost $2,300

Schedule for Slice Test

- This really needs more thought... times below are to start of integration
- Option 1 ~ 3 mo
  - Trigger input board ~ 1 mo elapsed
  - Firmware tweaks ~ 1 mo with spec
  - Software ~ 1 mo
- Option 2 ~ 6-8 mo
  - 75 md engineering ~ 4 months FT
  - including inefficiency, fab cycles ~ 6 months+

Backup/Review Slides

DHCAL Readout

Diagram from Proposal

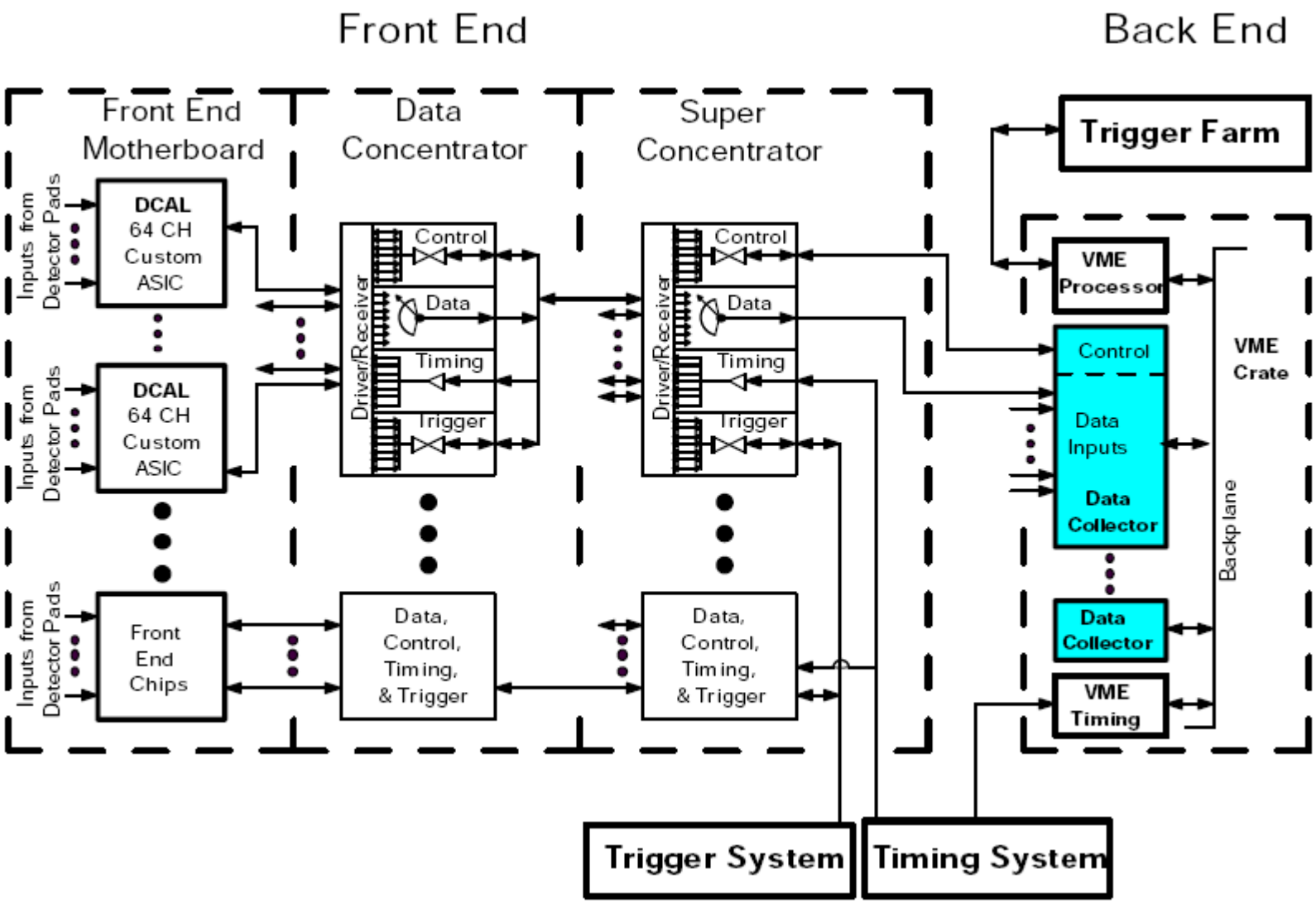

DCOL Alternative 1

6U VME, no transition module

- 12 SFF (dual LC) optical transceivers fit on FP
- Rx for data; Tx for ctrl: could use one duplex LC fiber to each SC
- Plenty of room for other stuff if done in FPGAs

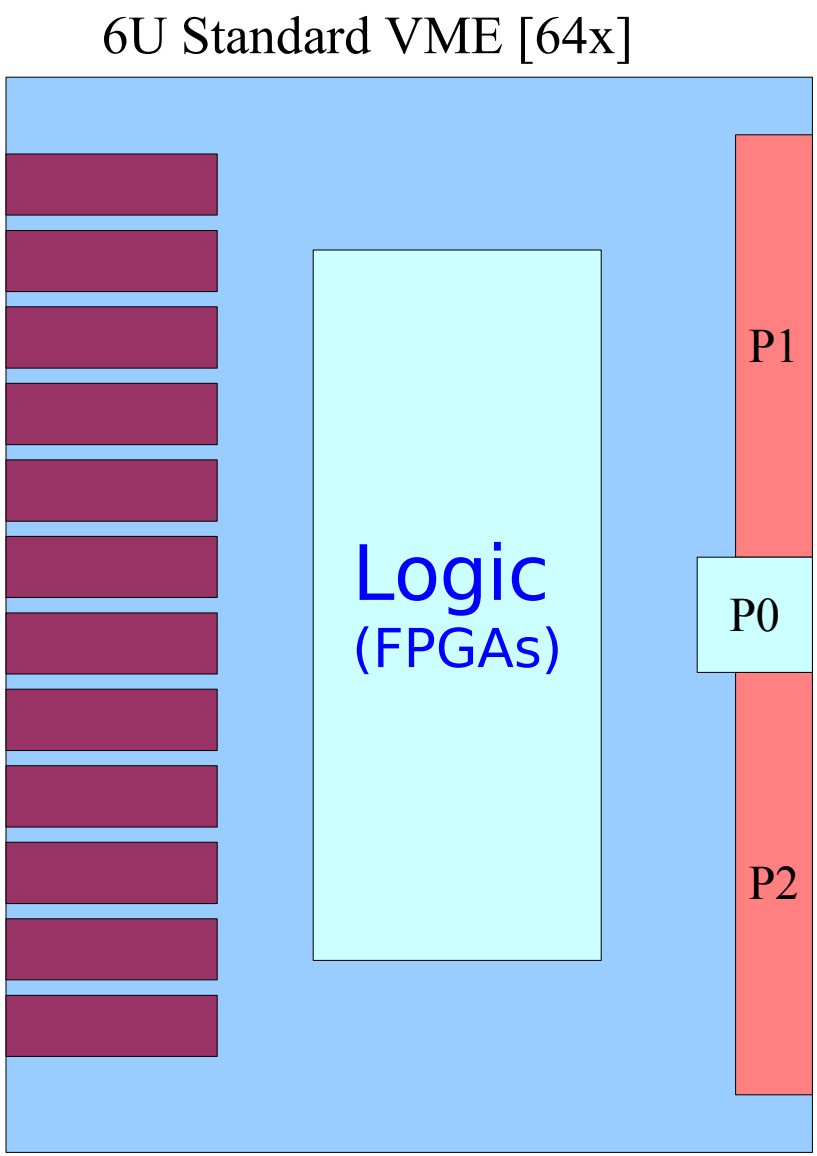

DCOL Alternative 1

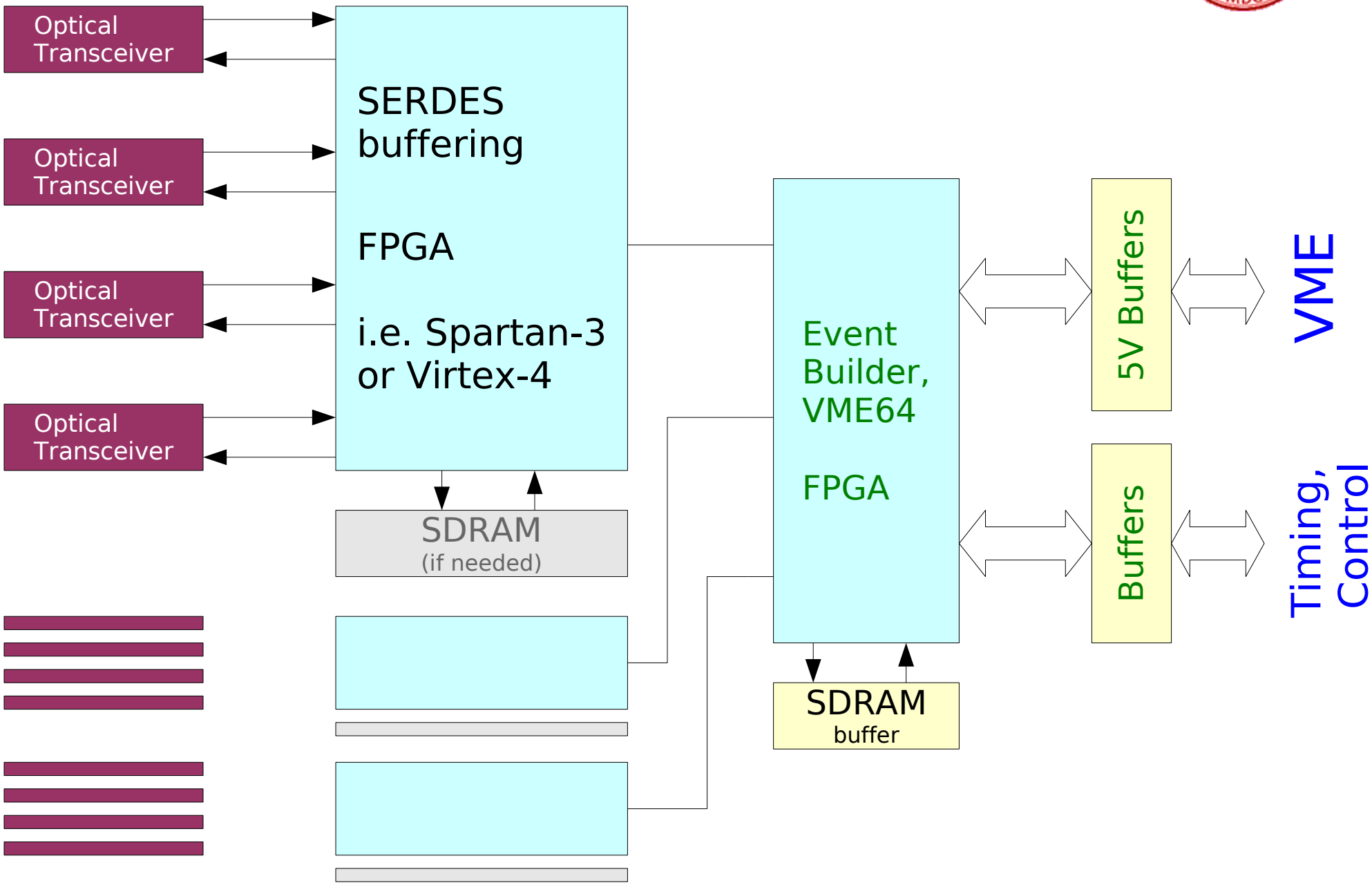

CMS Data Concentrator

(J. Rohlf)

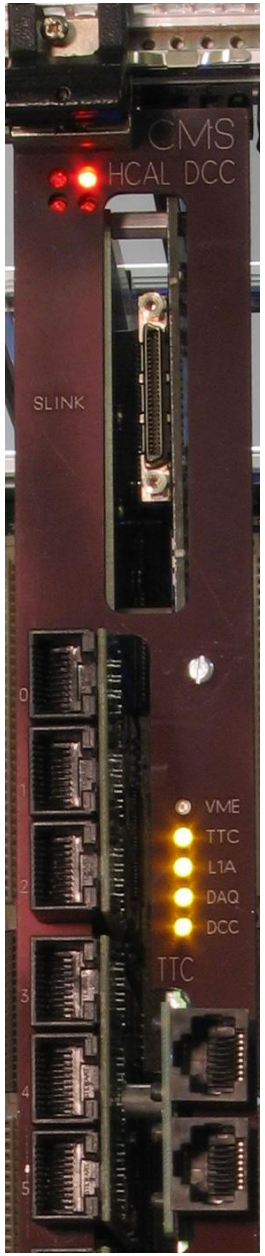

9U x 400mm VME module with up to 18 inputs
Throughput 200MBytes/sec with fiber output
VME motherboard with PCI bus daughterboard sites
(PC-MIP and PMC)
Can be configured for up to 18 inputs, each 40MHz
Channel Link over RJ-48 (5 pair) cable (>1Gbit/sec each)

40 boards installed in CMS/HCAL at CERN

Proven design, but uses somewhat obsolete technology.
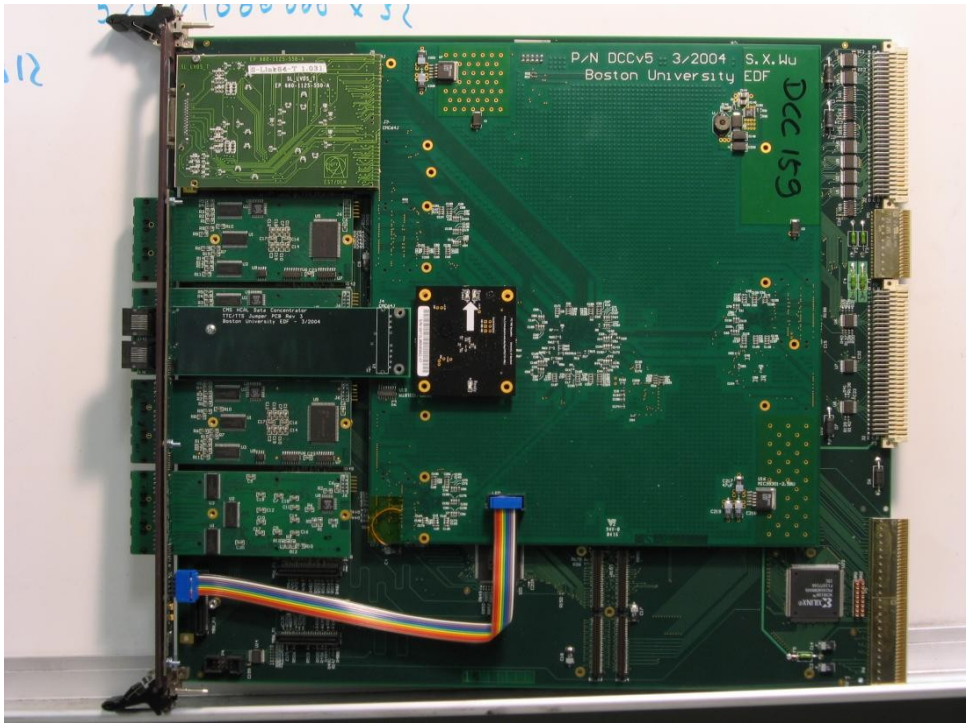
Cost about $3500 to produce (2004)