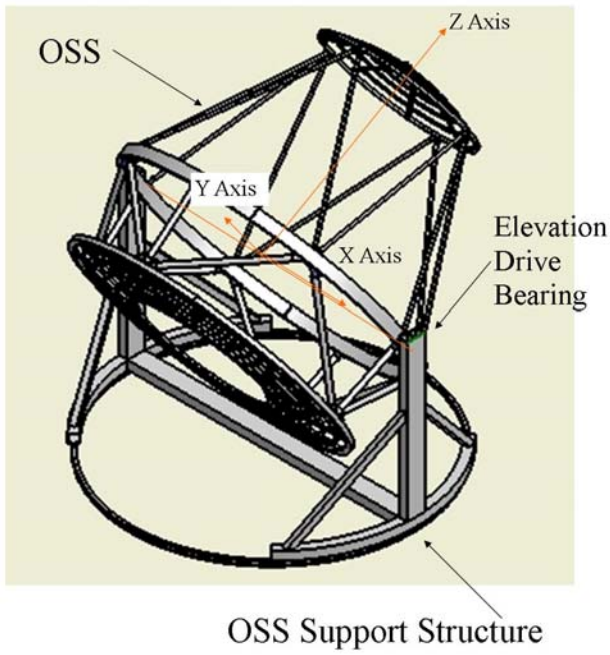

1.0 Define Inputs and Assumptions

The purpose of this analysis is to understand the forces/torques required to rapidly move the proposed Aplanar telescope. This analysis will be used to begin to size the motors/gearboxes/bearings/rollers needed to move the telescope in elevation and azimuth. An important working assumption is that the telescope is being rotated through its center of gravity (CG) about principle axes of inertia. Since the telescope is symmetric about the axis of rotation this is believed to be a good working assumption. The Mass Moments and Products of Inertia that are used are a compromise between values that have been extracted from the solid model of the telescope and those of existing large telescopes. With the assumption of symmetry and the Mass Products of Inertia being zero the rotational inertia is dependent only upon the angular acceleration, α, and not the angular velocity, ω. The ability to swivel rapidly to points in the sky depends upon both the angular acceleration and velocity. If the angle of rotation is very small then the maximum angular velocity may never be reached if the angular acceleration is to small.

For the calculation of the elevation drive system certain assumptions were made about the location of the CG. If the CG is exactly on line of the axis of rotation for the elevation system then only the inertia load has to be overcome. However, it was felt that during construction that it will be impossible to accurately locate the CG direclty on the axis of rotation. Counterweights can be used to alter the location of the CG. However, the addition of counterweights to the primary and secondary support structures will increase the deformations of the

mirrors so it is desireable to minimize the use of counterweights.

The specifications of the azimuth drive would be the following:

- Support a weight of 28 tons.
- Rotate a structure with a mass moment of inertia of 661,400 kg*m2
- Have a maximum angular velocity of 5 deg/sec
- Accelerate to the maximum angular velocity in 3 seconds which is an angular acceleration of 1.67deg/sec2
- Obtain an angular positioning accuracy of 0.01 deg.

It is recognized that the accuracy of the system is dependent not only on the design of the bearings and drive system but also the stiffness and natural frequency of the telescope structure as well as external disturbances such as wind loads.

1.1 Define Inputs

$kip := 1000lbf$ $\quad arcmin := \frac{1deg}{60}$ $\quad arcsec := \frac{arcmin}{60}$

$rpm := 360\frac{deg}{min}$

$Wt := 56kip$ Total Weight of OSS

$Ix := 661400kg\cdot m^2$ Mass Moment of Inertia of OSS

$\omega max := 5\frac{deg}{sec}$ Maximum angluar velocity--HESS max = 100deg/min=1.67deg/sec

$\omega track := \frac{360deg}{24hr}$ Minimum angluar velocity for tracking stars

$\omega track = 0.00416667\cdot\frac{deg}{sec}$ $\quad \omega track = 15.00\cdot\frac{arcsec}{sec}$

$\alpha := \frac{\omega max}{3sec}$ Angular acceleration in 3 sec to max angular velocity----HESS accelerates in 1sec -- 1.67deg/sec2

$\alpha = 1.67\cdot\frac{deg}{sec^2}$

$\Delta := 0.01deg$ Angular positioning accuracy -- position readout resolution is 0.00275 degrees.

$Rrail := 187in$ Radius of rail centerline

2.0 Calculate the Angular Acceleration

$ta := \frac{\omega max}{\alpha}$ $\quad ta = 3.00\,s$ Time for acceleration to maximum angular velocity

$\theta a := \frac{1}{2}\alpha \cdot ta^2$ $\quad \theta a = 7.50 \cdot deg$ Angle during acceleration period

$\theta max := 360deg$ Defined maximum angular motion

$tc := \frac{\theta max - 2 \cdot \theta a}{\omega max}$ $\quad tc = 69.00\ s$ Time of constant angular velocity

$tmax := 2 \cdot ta + tc$ $\quad tmax = 75.00\ s$ Time required to achieve θmax

$t := 0.0sec, 0.1sec .. tmax$

$$\omega(t) := \begin{cases} (\alpha \cdot t) & \text{if } t \le ta \\ \omega max & \text{if } t > ta \\ [\omega max - \alpha \cdot (t - ta - tc)] & \text{if } t > ta + tc \end{cases}$$

$$\theta(t) := \begin{cases} \left(\frac{1}{2}\alpha \cdot t^2\right) & \text{if } t \le ta \\ [\theta a + \omega max \cdot (t - ta)] & \text{if } t \ge ta \wedge t \le tc + ta \\ \left[[\omega max \cdot (t - tc - ta)] - \frac{1}{2} \cdot \alpha \cdot (t - tc - ta)^2 + \theta a + \omega max \cdot tc\right] & \text{if } t > ta + tc \end{cases}$$

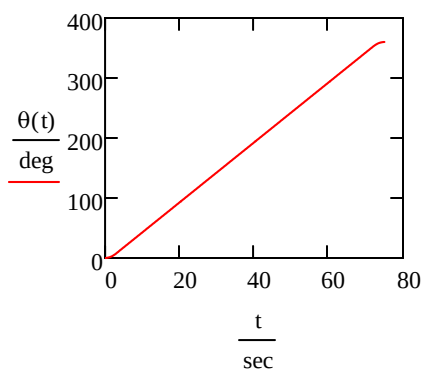

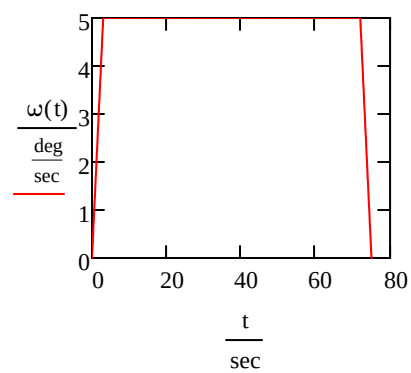

3.0 Calculation of Torques

3.1 Calculate the Torque needed to overcome inertia of OSS
Assume CG is on the axis of rotation

$TaInertia := Ix \cdot \alpha$ $\quad TaInertia = 14.19 \cdot kip \cdot ft$ Torque needed about the vertical axis to angular accelerate the OSS.

3.2 Calculate Torque needed to overcome wind load generatated by rotation

$\rho air := 1.16 \frac{kg}{m^3}$

$CD := 1.2$ Drag coefficient

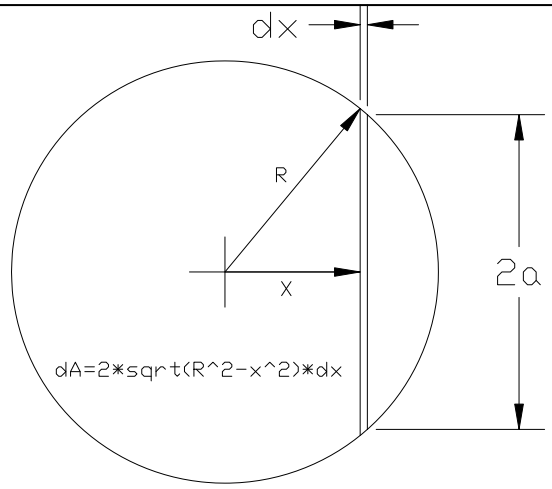

$$Twind := 2 \cdot CD\, \rho air \cdot \omega max^2 \cdot \int_0^{Rrail} x^3 \cdot \sqrt{Rrail^2 - x^2}\, dx$$

$Twind = 5.04 \cdot lbf \cdot ft$ Torque from wind resistance as telescope rotates.

3.3 Calculate the torque needed to overcome roller friction

Several bearings are being investigated. THK rails/bearings offer less then 1% friction. Assume 0.5% -- This is 0.5% of the normal force applied to the roller. The force on the rollers in the normal direciton is a combination of the weight and the forces due to overturning.

$Tf := Rrail \cdot 0.5\% Wt$

$Tf = 4.36 \cdot ft \cdot kip$ Torque needed to overcome friction from the azimuthal rollers.

3.4 Calculate the Total Torque in the Azimuth Direction

$Ta := TaInertia + Tf + Twind$

$Ta = 18.56 \cdot kip \cdot ft$

$Ftangent := \frac{Ta}{Rrail}$

$Ftangent = 1190.93 \cdot lbf$ Force that has to be applied tangent to the rail

4.0 Friction Wheel Drive System

4.1 Calculate the Requirements for the Drive Wheel and Output of Gear Box -- Assuming one drive system -- Friction Wheel

$Rwheel := 6in$ Radius of Drive wheel

$Twheel := Ftangent \cdot Rwheel$

$Twheel = 595.46 \cdot lbf \cdot ft$ Torque on Wheel and also output torque of gear box

$\omega a := \frac{Rrail}{Rwheel} \cdot \omega max$

$\omega a = 25.97 \cdot rpm$ Rotation of wheel and output rotation of gear box

$HPa := Twheel \cdot \omega a$

$HPa = 2.94 \cdot hp$

Assume a steel wheel in friction contact with the rail. Calculate the normal force (radial force) on the drive wheel that is needed to achieve the tangent force on the drive wheel.

$\mu := 0.15$ Coefficient of Friction

$Nwheel := \frac{Ftangent}{\mu}$

$Nwheel = 7.94 \cdot kip$ Radial load on output shaft of gearbox

4.2 Calculate the Hertz Contact Stress - One Drive System

Use a friction roller pre-load three times higher than Nwheel

$ksi := 1000psi$

$E1 := 30000ksi$ Modulus of Rail

$\nu 1 := 0.30$ Poison ratio of Rail

$E2 := 30000ksi$ Modulus of Friction Wheel

$\nu 2 := 0.30$ Poison Ratio of Friction Wheel

$D1 := 2Rrail$

$D1 = 31.17 \cdot ft$ Diameter of Rail

$D2 := 2 \cdot Rwheel$ Diameter of Friction Wheel

$D2 = 12.00 \cdot in$

$Lwheel := 6.0in$ Height of Friction Wheel

$$b := \sqrt{\frac{2\cdot(3Nwheel)}{\pi\cdot Lwheel}\cdot\frac{\frac{1-\nu1^2}{E1}+\frac{1-\nu2^2}{E2}}{\frac{1}{D1}+\frac{1}{D2}}}$$

$b = 0.0422\cdot in$ Half width of contact area

$$\sigma Hertz := \frac{2\cdot(2Nwheel)}{\pi\cdot b\cdot Lwheel}$$

$\sigma Hertz = 39.90\cdot ksi$ Contact stress

4.3 Calculate the motor and gear box requirements -- Assuming a single drive system

$GR := 20$ Gear reduction of gear box attached to motor

$Tma := \frac{Twheel}{GR}$ $Tma = 29.77\cdot ft\cdot lbf$ Output of motor -- input of gearhead

$\omega ma := \omega a\cdot GR$ $\omega ma = 519.44\cdot rpm$

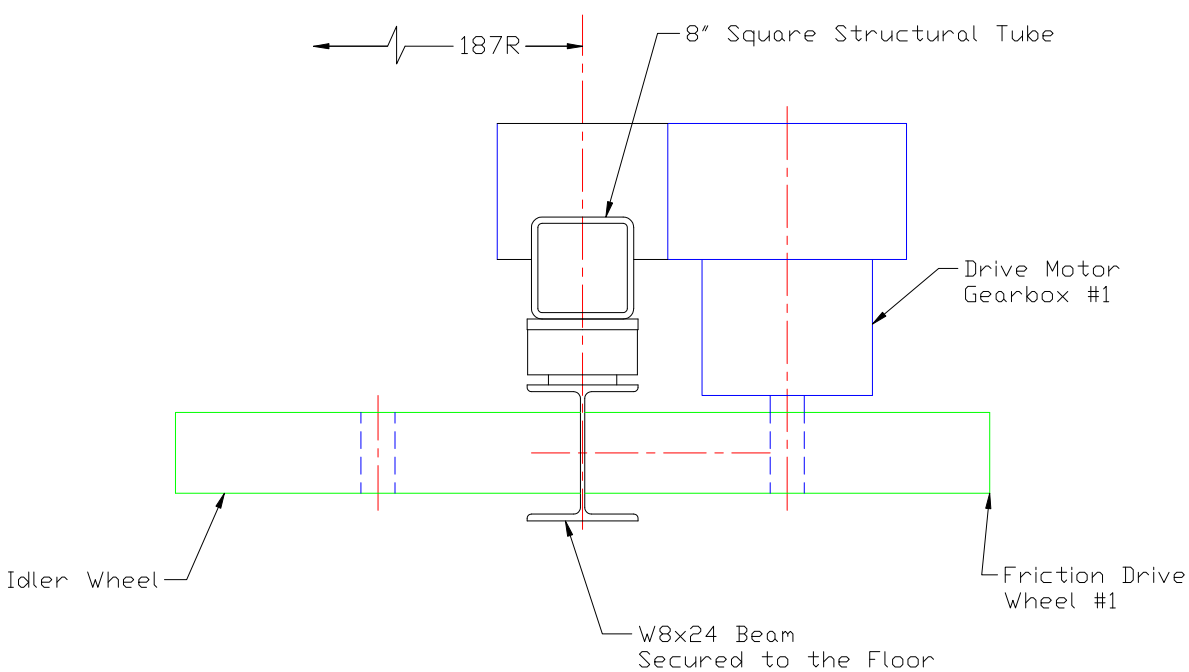

4.4 Calculate the Requirements for the Drive Wheel and Output of Gear Box --

Assuming Two drive systems on opposite sides of rail

$Rwheel = 6.00 \cdot in$ Radius of Drive wheel

$Ftangent = 1190.93\ lbf$

$Twheel := \frac{Ftangent \cdot Rwheel}{2}$

$Twheel = 3572.78 \cdot lbf \cdot in$ Torque on Wheel and also output torque of gear box

$\omega a := \frac{Rrail}{Rwheel} \cdot \omega max$

$\omega a = 25.97 \cdot rpm$ Rotation of wheel and output rotation of gear box

$HPa := Twheel \cdot \omega a$

$HPa = 1.47 \cdot hp$

Assume a steel wheel in friction contact with the rail. Calculate the normal force (radial force) on the drive wheel that is needed to achieve the tangent force on the drive wheel.

$Nwheel := \frac{Ftangent}{2\mu}$

$Nwheel = 3.97 \cdot kip$ Radial load on output shaft of gearbox

4.5 Calculate the Hertz Contact Stress - Two Drive System

Use a friction roller pre-load three times higher than Nwheel

$ksi := 1000psi$

$E1 := 30000ksi$ Modulus of Rail

$\nu 1 := 0.30$ Poison ratio of Rail

$E2 := 30000ksi$ Modulus of Friction Wheel

$\nu 2 := 0.30$ Poison Ratio of Friction Wheel

$D1 := 2Rrail$

$D1 = 31.17 \cdot ft$ Diameter of Rail

$D2 := 2 \cdot Rwheel$ Diameter of Friction Wheel

$D2 = 12.00 \cdot in$

$Lwheel := 6.0in$ Height of Friction Wheel

$$b := \sqrt{\frac{2 \cdot (3Nwheel)}{\pi \cdot Lwheel} \cdot \frac{\frac{1 - \nu 1^2}{E1} + \frac{1 - \nu 2^2}{E2}}{\frac{1}{D1} + \frac{1}{D2}}}$$

$b = 0.0299 \cdot in$ Half width of contact area

$$\sigma Hertz := \frac{2 \cdot (2Nwheel)}{\pi \cdot b \cdot Lwheel}$$

$\sigma Hertz = 28.22 \cdot ksi$ Contact stress

4.6 Calculate the motor and gear box requirements -- Assuming a Two drive system

$GR := 20$ Gear reduction of gear box attached to motor

$Tma := \frac{Twheel}{GR}$ $Tma = 178.64 \cdot in \cdot lbf$ Output of motor -- input of gearhead

$\omega ma := \omega a \cdot GR$ $\omega ma = 519.44 \cdot rpm$

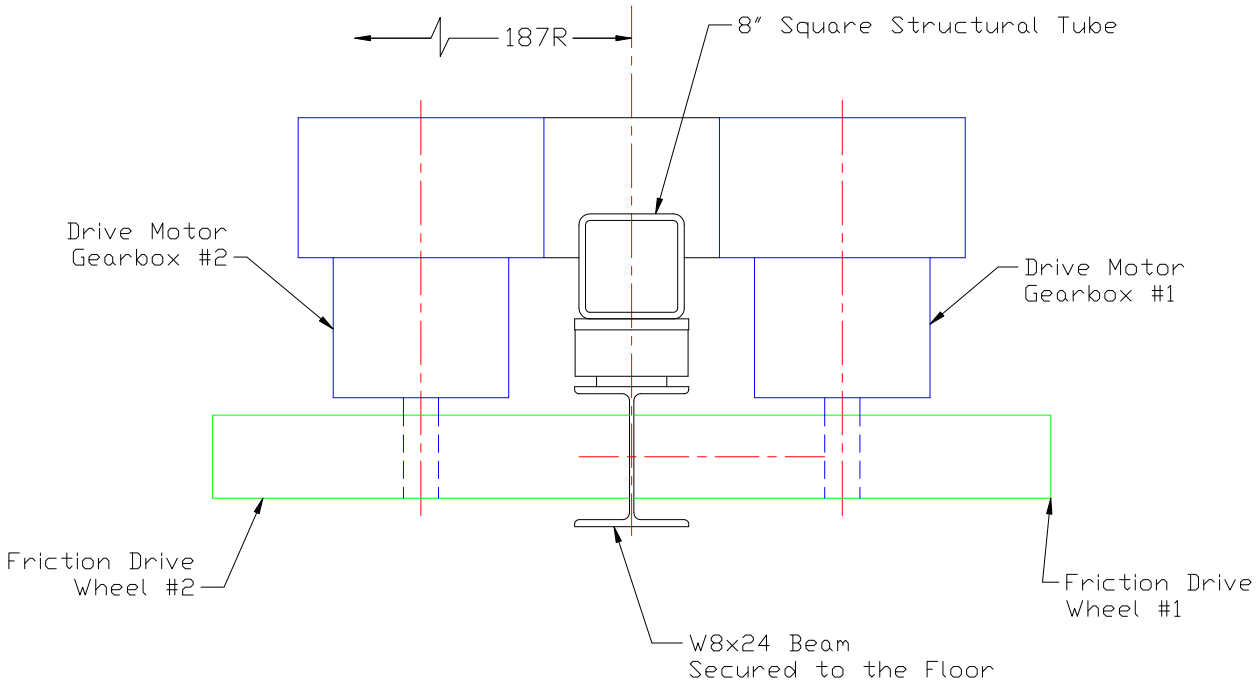

5.0 Calculations for a Chain Drive

A schematic of the chain drive is shown in the figure below. A rolled structural tube of diameter, D1, will be rolled and will provide structural support for the telescope structure. A chain will be wrapped around the tube as shown. The chain will be secured to the tube at one point only and then wrapped around the tube, through the idle sprockets, D2, and finally around the drive sprocket, D3. The chain will be initially tensioned when it is mounted and tension maintained by the idle sprockets which will be spring loaded and able to move radially. The sprockets will also be located so that the chain will come off of the structural tube at a tangent.

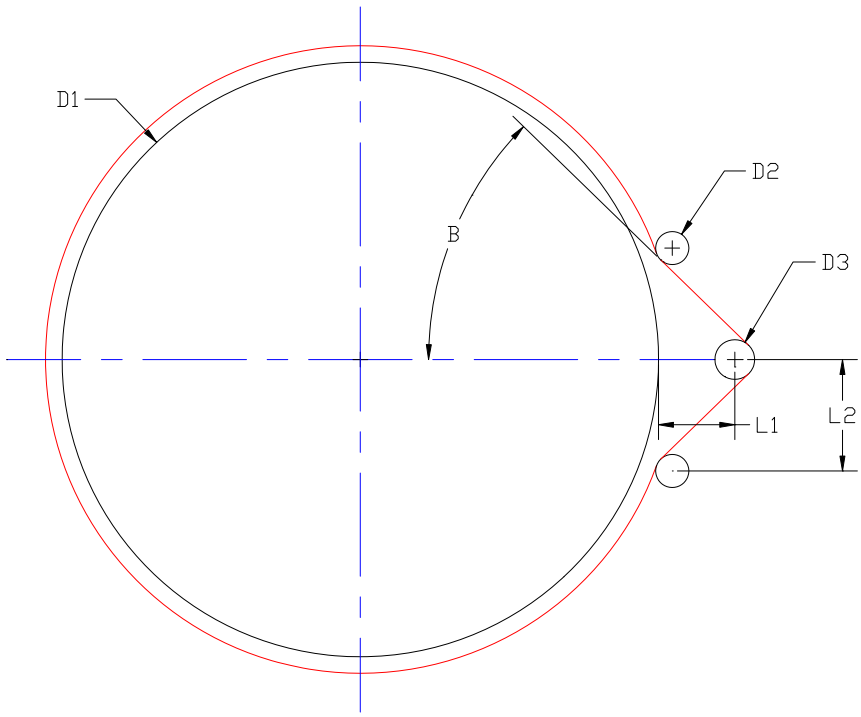

5.1 Define components

$Dis := 12in$ Diameter of Idler Sprocket

$Dds := 12in$ Diameter of drive sprocket

$$L1 := Dis + \frac{Dds}{2} + 6in$$

$L1 = 24.00 \cdot in$

$$L2 := \frac{Dis + Dds}{2} + 12in$$

$L2 = 24.00 \cdot in$

$$\eta := atan\left(\frac{L2}{L1}\right)$$

$\eta = 45.00 \cdot deg$ Angle the chain is making with the sprocket

$$Rsprocket := \frac{Dds}{2}$$ Radius of Drive sprocket

5.2 Calculate the chain, motor and gear box requirements

$Ftangent = 1190.93 \cdot lbf$ Calculated from the maximum torque in Section 3.4 above

$Tsprocket := Ftangent \cdot Rsprocket$

$Tsprocket = 595.46 \cdot lbf \cdot ft$ Torque on Drive Sprocket and also output torque of gear box

$\omega sprocket := \frac{Rrail}{Rsprocket} \cdot \omega max$

$\omega sprocket = 25.97 \cdot rpm$ Rotation of sprocket and output rotation of gear box

$HPs := Tsprocket \cdot \omega sprocket$

$HPs = 2.94 \cdot hp$

Choose an ANSI 80 Double Strand chain that has a tensile strength of 4,880 lbs which gives a safety factor of 3 over the calculated tangential force, Ftangent.

$p := 1.00in$ pitch of ANSI 50 chain

$N := \frac{\pi \cdot Dds}{p}$ $N = 37.70$ Number of teeth on drive sprocket -- choose N=37 and calculate Dds

$N := 37$

$Dds := \frac{N \cdot p}{\pi}$ $Dds = 11.777 \cdot in$

$GR := 20$ Gear reduction of gear box attached to motor

$Tms := \frac{Tsprocket}{GR}$ $Tms = 29.77 \cdot ft \cdot lbf$ Output of motor -- input of gearhead

$\omega ms := \omega sprocket \cdot GR$ $\omega ms = 519.44 \cdot rpm$

6.0 Calculate a drive system using a rack rolled to the rail radius

Straight sections of gear racks are commercially available for a very low price. Tests at ANL indicate that it is possible to roll straight racks into a radius accurately without distorting the teeth and pitch of the gears. It therefore might be possible to cheaply create a circular rack that could drive the telescope. Such a drive system is highly desireable because of its stiffness and the accuracy that is possible. Further work is needed to evaluate how difficult it might be to align separate rack sections.

Assume the rack is 1" high. Calculate how much the teeth of the rack will separate when the rack is bent into the radius of the rail, Rrail.

$P := \frac{10}{in}$ Diametrical pitch

$Nrail := 2 \cdot Rrail \cdot P$

$Nrail = 3740.00$ Number of teeth on rack that is rolled around rail

$\frac{2 \cdot \pi \cdot [(Rrail + 1in) - Rrail]}{Nrail} = 0.0017 \cdot in$ Distance each tooth opens -- this is negligible so it is possible to roll a straight rack into curved gear

6.1 Calculate the size of the driving spur gear

$Dspur := 6in$ Diameter of Spur gear

$Nspur := Nrail \cdot \frac{Dspur}{2 \cdot Rrail}$ Choose number of teeth and then calculate PD2

$Nspur = 60.00$

$Tspur := Ta \cdot \frac{Nspur}{Nrail}$ $Tspur = 297.73 \cdot lbf \cdot ft$ Torque at the output of the gear box

$\omega spur := \omega max \cdot \frac{Nrail}{Nspur}$ $\omega spur = 51.94 \cdot rpm$ Speed of spur gear -- output of gear box

$\frac{2 \cdot \pi \, Rrail}{Nrail} = 0.31 \cdot in$

6.2 Calculate the motor and gear box requirements.

$GR := 20$ Gear reduction of gear box attached to motor

$Tm := \frac{Tspur}{GR}$ $Tm = 14.89 \cdot lbf \cdot ft$ Output of motor -- input of gearhead

$\omega m := \omega spur \cdot GR$ $\omega m = 1038.89 \cdot rpm$ RPM of motor

$HP := Tm \cdot \omega m$

$HP = 2.94 \cdot hp$

6.3 Calculate Gear Stresses

Verify the bending and contact stress of the gear

$Ft := \frac{2Tspur}{Dspur}$ $Ft = 1190.93 \, lbf$ Tangential force

$bw := 1in$ Face width

$Y := 0.355$ Lewis form factor

$\sigma bending := \frac{Ft \cdot P}{bw \cdot Y}$ Allowable stress

$\sigma bending = 33.55 \cdot ksi$ Assume the gear material is cast iron

$\sigma bendingmax := 360MPa = 52.21 \cdot ksi$ Bending is OK

$Ze := 190\sqrt{MPa}$

$Se := 430MPa = 62.37 \cdot ksi$ Allowable Endurance Stress

$Scontact := Ze \cdot \sqrt{\frac{Ft}{bw \cdot \cos(15deg)} \cdot \left(\frac{2}{Dspur} + \frac{1}{Rrail}\right)} = 46.76 \cdot ksi$ Contact stress is OK

At Argonne a 6ft long rack was rolled to an 18ft radius to investigate if this was possible and to see what the effect was on the gear teeth -- how well does the spur gear fit into the rolled rack. Below are some pictures of the rack and fit with the spur gear. The gear spacing opened up only 0.002" and gear engagement increased by 0.030" after rolling.