1.0 Define Inputs and Assumptions

The purpose of this analysis is to understand the forces/torques required to rapidly move the DC telescope. This analysis will be used to begin to size the motors/gearboxes/bearings/rollers needed to move the telescope in elevation and azimuth. An important working assumption is that the telescope is being rotated through its center of gravity (CG) about principle axes of inertia. Since the telescope is symmetric about the axis of rotation this is believed to be a good working assumption. With the assumption of symmetry and the Mass Products of Inertia being zero the rotational inertia is dependent only upon the angular acceleration, α, and not the angular velocity, ω. The ability to swivel rapidly to points in the sky depends upon both the angular acceleration and velocity. If the angle of rotation is very small then the maximum angular velocity may never be reached if the angular acceleration is to small.

For the calculation of the elevation drive system certain assumptions were made about the location of the CG. If the CG is exactly on line of the axis of rotation for the elevation system then only the inertia load has to be overcome. However, it was felt that during construction that it will be impossible to accurately locate the CG direclty on the axis of rotation. Counterweights can be used to alter the location of the CG. However, the addition of counterweights to the primary and secondary support structures will increase the deformations of the mirrors so it is desireable to minimize the use of counterweights.

1.1 Define Inputs

$kip := 1000lbf$ $\quad arcmin := \frac{1deg}{60}$ $\quad arcsec := \frac{arcmin}{60}$

$rpm := 360 \frac{deg}{min}$

$Lc := 18m$ Distance from center of mirror to camera -- F/D=1.5

$Lcw := 20ft$ Distance from center of mirror to counter weights

$Wc := 3500lbf$ Weight of Camera

$Wcw := Wc \cdot \frac{Lc}{Lcw}$

$Wcw = 10334.65\,lbf$ Weight of Counter Weights

$Wp := 50000lbf$ Weight of Primary structure

$Wm := 5000lbf$ Weight of Mirrors

$Wt := Wc + Wcw + Wp + Wm$

$Wt = 68834.65\,lbf$ Total Weight of OSS

$\omega max := 5 \frac{deg}{sec}$ Maximum angluar velocity--HESS max = 100deg/min=1.67deg/sec

$\omega track := \frac{360deg}{24hr}$ Minimum angluar velocity for tracking stars

$\omega track = 0.00416667 \cdot \frac{deg}{sec}$ $\omega track = 15.00 \cdot \frac{arcsec}{sec}$

$\alpha := \frac{\omega max}{3sec}$ Angular acceleration in 3 sec to max angular velocity----HESS accelerates in 1sec -- 1.67deg/sec2

$\alpha = 1.67 \cdot \frac{deg}{sec^2}$

$\Delta := 0.01deg$ Angular positioning accuracy -- position readout resolution is 0.00275 degrees.

$Rrail := 187in$ Radius of rail centerline

$\rho := \frac{.283 \frac{lbf}{in^3}}{g}$ $\rho = 7833.41 \cdot \frac{kg}{m^3}$ Mass Density of Steel

2.0 Mass Moment of Inertia of OSS

$Ixx := 688590.86 kg \cdot m^2$ Mass moment of inertia calculated from preliminary model

3.0 Calculate the Angular Acceleration

$ta := \frac{\omega max}{\alpha}$ $ta = 3.00\,s$ Time for acceleration to maximum angular velocity

$\theta a := \frac{1}{2} \alpha \cdot ta^2$ $\theta a = 7.50 \cdot deg$ Angle during acceleration period

$\theta max := 360deg$ Defined maximum angular motion

$tc := \frac{\theta max - 2 \cdot \theta a}{\omega max}$ $tc = 69.00\,s$ Time of constant angular velocity

$tmax := 2 \cdot ta + tc$ $tmax = 75.00\,s$ Time required to achieve θmax

$t := 0.0sec, 0.1sec .. tmax$

$$\omega(t) := \begin{cases} (\alpha \cdot t) & \text{if } t \le ta \\ \omega max & \text{if } t > ta \\ [\omega max - \alpha \cdot (t - ta - tc)] & \text{if } t > ta + tc \end{cases}$$

$$\theta(t) := \begin{cases} \left(\frac{1}{2}\alpha \cdot t^2\right) & \text{if } t \le ta \\ [\theta a + \omega max \cdot (t - ta)] & \text{if } t \ge ta \wedge t \le tc + ta \\ \left[[\omega max \cdot (t - tc - ta)] - \frac{1}{2} \cdot \alpha \cdot (t - tc - ta)^2 + \theta a + \omega max \cdot tc\right] & \text{if } t > ta + tc \end{cases}$$

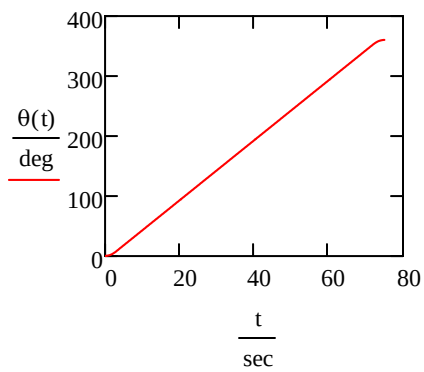

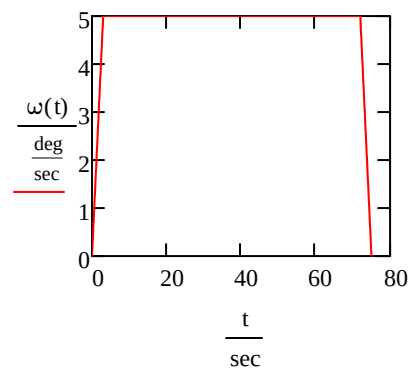

4.0 Calculation of Torques

4.1 Calculate the Torque needed to overcome inertia of OSS
Assume CG is on the axis of rotation

$TaInertia := Ixx \cdot \alpha$ $\quad TaInertia = 14.77 \cdot kip \cdot ft$ Torque needed about the vertical axis to angular accelerate the OSS.

$TaInertia = 20.03 \cdot kN \cdot m$

4.2 Calculate Torque needed to overcome wind load generatated by rotation

$\rho air := 1.16 \frac{kg}{m^3}$

$CD := 1.2$ Drag coefficient

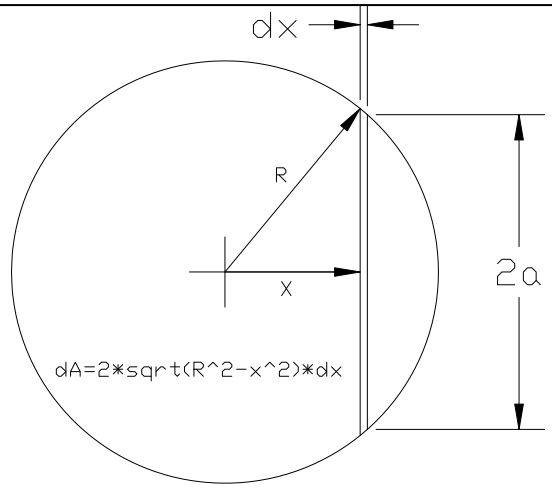

$$Twind := 2 \cdot CD\, \rho air \cdot \omega max^2 \cdot \int_0^{Rrail} x^3 \cdot \sqrt{Rrail^2 - x^2}\, dx$$

$Twind = 5.04 \cdot lbf \cdot ft$ Torque from wind resistance as telescope rotates.

$Twind = 6.83 \cdot N \cdot m$

4.3 Calculate the Aximuth Drive torque needed to overcome roller friction

Several bearings are being investigated. Assume 2% -- This is 2% of the normal force applied to the roller. The force on the rollers in the normal direciton is a combination of the weight and the forces due to overturning.

$Tf := Rrail \cdot 2.0\% \, Wt$

$Tf = 21.45 \cdot ft \cdot kip$ Torque needed to overcome friction from the azimuthal rollers.

$Tf = 29.09 \cdot kN \cdot m$

4.4 Calculate the Total Torque in the Azimuth Direction

$Ta := TaInertia + Tf + Twind$

$Ta = 36.23 \cdot kip \cdot ft$

$Ftangent := \frac{Ta}{Rrail}$

$Ftangent = 2325.05 \cdot lbf$ Force that has to be applied tangent to the rail

$Ftangent = 10342.36 \cdot N$

4.5 Calculate the Total Torque Needed for Elevation Drive

Using roller bearing for Elevation Drive so Friction is 0.5% of axial load. Assume a 20kip axial load based on preliminary calculations. Assume a 3ft Diameter bearing.

$$Televation := TaInertia + Twind + 0.5\% \cdot 20kip \cdot \frac{3ft}{2}$$

$$Televation = 14.93 \cdot kip \cdot ft$$

$$Televation = 20240.50 \cdot N \cdot m$$

5.0 Friction Wheel Drive System

5.1 Calculate the Requirements for the Drive Wheel and Output of Gear Box

Use Demag DRS315 Wheel Block -- 8 blocks total -- 4 blocks driven

$$Rwheel := \frac{12.4in}{2}$$ Radius of Drive wheel

$$Twheel := \frac{Ftangent}{4} \cdot Rwheel$$

$$Twheel = 300.32 \cdot lbf \cdot ft$$ Torque on Wheel and also output torque of gear box

$$Twheel = 407.18 \cdot N \cdot m$$

$$\omega a := \frac{Rrail}{Rwheel} \cdot \omega max$$

$$\omega a = 25.13 \cdot rpm$$ Rotation of wheel and output rotation of gear box

$$HPa := Twheel \cdot \omega a$$

$$HPa = 1.44 \cdot hp$$ $$HPa = 1071.72\ W$$

Assume a steel wheel in friction contact with the rail. Calculate the normal force (radial force) on the drive wheel that is needed to achieve the tangent force on the drive wheel.

$$\mu := 0.15$$ Coefficient of Friction

$$Nwheel := \frac{Ftangent}{4\mu}$$

$$Nwheel = 3.88 \cdot kip$$ Normal load on wheel -- calculations on the structure indicate each wheel will have to support 12 kips

$$Nwheel = 17237.26 \cdot N$$

5.2 Calculate the motor and gear box requirements

$$GR := 60$$ Gear reduction of gear box attached to motor

$Tma := \frac{Twheel}{GR}$ $\quad Tma = 5.01 \cdot ft \cdot lbf$ Output of motor -- input of gearhead

$Tma = 6.79 \cdot N \cdot m$

$\omega ma := \omega a \cdot GR$ $\quad \omega ma = 1508.06 \cdot rpm$

6.0 Elevation Drive System

The torque/horsepower required for the elevation system will be determined either by the inertia needed to accelerate the OSS and the offset of the CG from the center of the main support ring.

6.1 Calculate the Torque Needed for Angular Acceleration of Elevation

$TeInertia := \alpha \cdot Ixx$

$TeInertia = 14.77 \cdot kip \cdot ft$

$TeInertia = 20.03 \cdot kN \cdot m$

6.2 Calculate the Torque Needed for having the CG of the OSS Offcenter

During construction it is not know how close the CG will be to the axis of rotation for elevation. The location of the CG can always be modified by counterweights on the primary/secondary support structures, however, adding counter weights to these structure increases the deflections. The elevation drive system must be capable of handling some level of CG offset, how much??
Assume that the CG of OSS is offset by 6inch from the center of rotation -- worst case to establish the largest torque expected.

$e := 6in$ Offset of CG

$Tb := e \cdot Wt$ $\quad Tb = 34.42 \cdot kip \cdot ft$ Torque needed to resist CG offset

$Tb = 46663.62 \cdot N \cdot m$

6.3 Calculate the Total Required Torque for the Elevation Drive -- Assume two drives Assume 0.5% friction at bearings with a 20kip axial load and 3ft bearing diameter

$Te := Tb + TeInertia + Twind + 0.5\% \cdot 20kip \cdot \frac{3ft}{2}$

$Te = 49.35 \cdot kip \cdot ft$ Total Torque Needed for Elevation Drive

$Te = 592.15 \cdot kip \cdot in$ $\quad Te = 66904.13 \cdot N \cdot m$

$Tep := \frac{Te}{2}$ $\quad Tep = 24.67 \cdot kip \cdot ft$ torque per pinion gear

$Tep = 33452.06 \cdot N \cdot m$

6.4 Calculate the Required Motor Horsepower/Torque for the elevation drive -- assume two drives

$Pe := \omega max \cdot \frac{Te}{2}$ $\quad Pe = 3.91 \cdot hp$ Required Power

$Pe = 2919.24\ W$

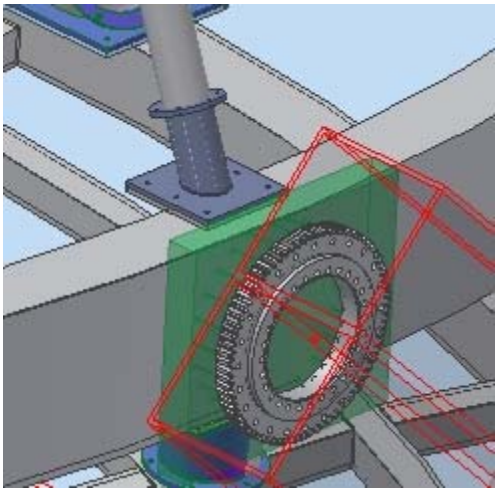

Use Kaydon Ring Bearing -special design

$PD1 := 28.8in$ Pitch Diameter of ring gear

$N1 := 72$ Number of teeth of ring gear

$DP1 := \frac{2.5}{in}$ Diametrical Pitch of ring gear

Calculate the size of the driving spur gear

$N2 := 12$ Choose number of teeth and then calculate PD2

$PD2 := \frac{N2}{DP1}$ $\quad PD2 = 4.80 \cdot in$ Calculated pitch diameter of spur gear

$Te2 := Tep \cdot \frac{N2}{N1}$ $\quad Te2 = 49.35 \cdot kip \cdot in$ Torque at the output of the gear box

$\omega 2 := \omega max \cdot \frac{N1}{N2}$ $\quad \omega 2 = 5.00 \cdot rpm$ Speed of spur gear -- output of gear box

Calculate the motor and gear box requirements.

$GR := 500$ Gear reduction of gear box attached to motor

$Tm := \frac{Te2}{GR}$ $\quad Tm = 98.69 \cdot lbf \cdot in$ Output of motor -- input of gearhead

$\omega m := \omega 2 \cdot GR$ $\quad \omega m = 2500.00 \cdot rpm$ RPM of motor