Silicon Detector Design Study

H.Weerts
Fermilab / Michigan State University

Intro & history

H.Weerts

"Once upon a time" SiD effort started at SLAC

A lot of effort, start & study basic concept

ALCPG , with approval of WWS, initiated Silicon based detector design study based on above

John Jaros and Harry Weerts were asked to launch it

For last few months have attended meetings in different regions to "launch" this concept study and find participants from all regions of world.

Have also started to put some organization in place and CAL was first one

Need to do some work on detector concept now.....

Goals and time line--draft

H.Weerts

Goal:

- Benchmarks physics (agree with other designs)
- Conceptual design → CDR
- Cost estimate (need guidelines & standards)
- Show technical feasibility of subsystems
- Define necessary R&D

WWS

Fall 2004 – Summer 2005:

Hadr. Showers
Algorithms

- Design Studies agree on common assumptions
- Optimize design
- Make design realistic (necessary support, etc.)
- Establish simulation (common with all others ?)
- Performance/Response to benchmark processes

August 2005, Int. Lin. Coll. Wrkshp at Snowmass

- Agree on strawman design
- Start final series of benchmark and simulations
- Define work needed to complete by end 2005

WEB pages

H.Weerts

http://www-sid.slac.stanford.edu

http://sid.fnal.gov or http://ilc.fnal.gov

If you are interested …….. sign up here

Guess you already have…..

Basic Idea & Assumptions for SiD

H.Weerts

(NOT: to study a small detector)

- ILC detector based on a integrated, optimized and hermetic design
- Aggressive & High performance detector
- Constrain cost and use that from the beginning as a constraint
- Optimize the integrated physics performance of the subsystems
- Assume "particle/energy" flow concept in overall detector design (needed to achieve physics performance)

- Use silicon as the main detector element for all tracking

In some sense this started as a response to a "Standard" e^+e^- detector

(can it be done a different way ???)

SiD starting point (1)

H.Weerts

Starting point: SiD concept

↓

- *Accept* notion that excellent energy flow calorimetry is required, and explore optimization of a Tungsten-Silicon EMCal and the implications for the detector architecture…

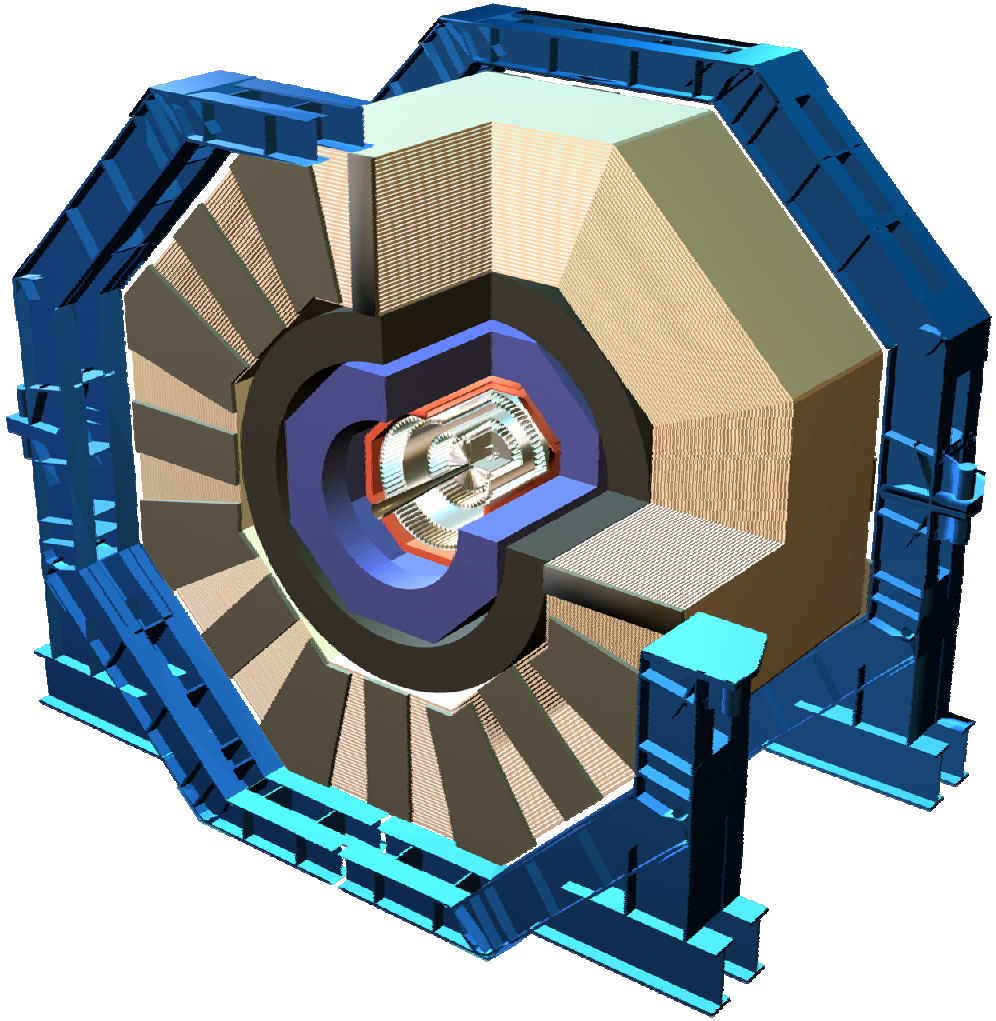

SiD starting point/motivation (2)

H.Weerts

- Robustness of silicon against unexpected beam conditions/loss
- Silicon is expensive, so limit area by limiting radius
- Get back BR^2 by pushing B up (~5T)
- Maintain tracking resolution by using silicon strips in tracker
- Buy safety margin for VXD with the 5T B-field (limit radial extent of pair background; smaller radius for VXD.)
- Make full use of 5 VXD space points for pattern recognition

SiD concept overview

H.Weerts

Very schematic drawing; more later

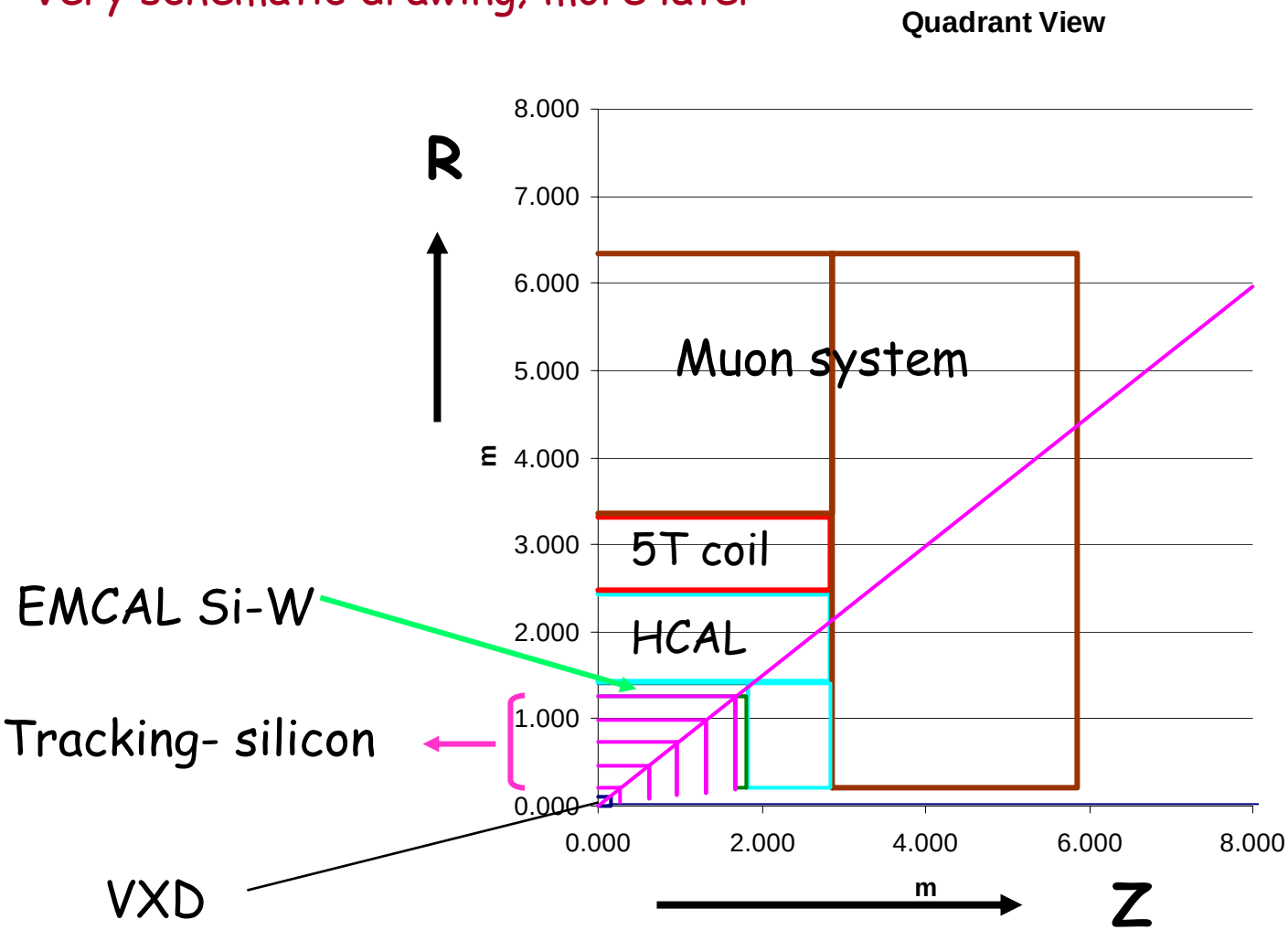

NOT A SMALL DETECTOR

SiD Concept sizes from FNAL model (1)

H.Weerts

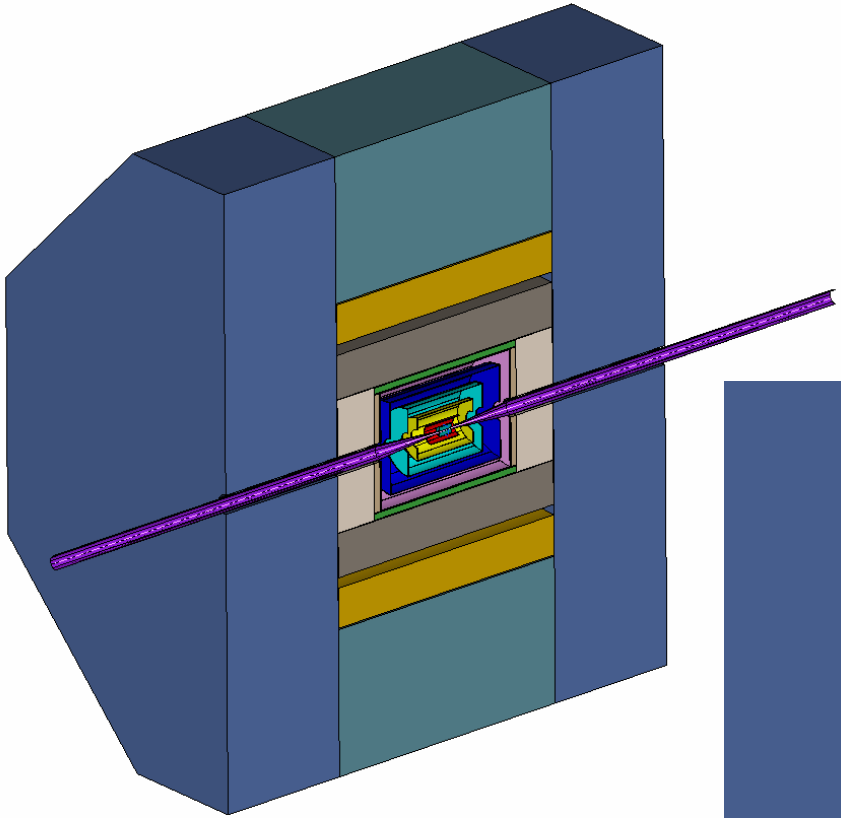

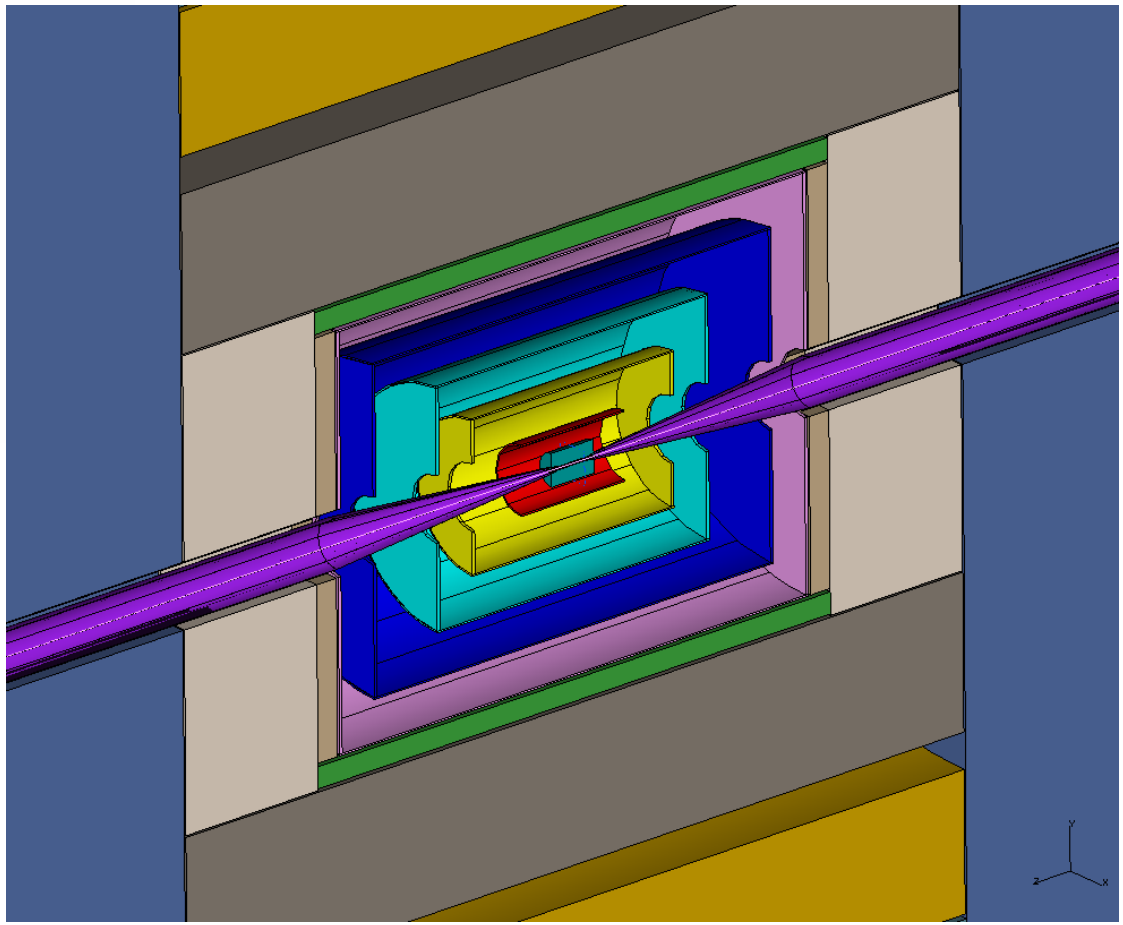

SiD model pictures (2)

H.Weerts

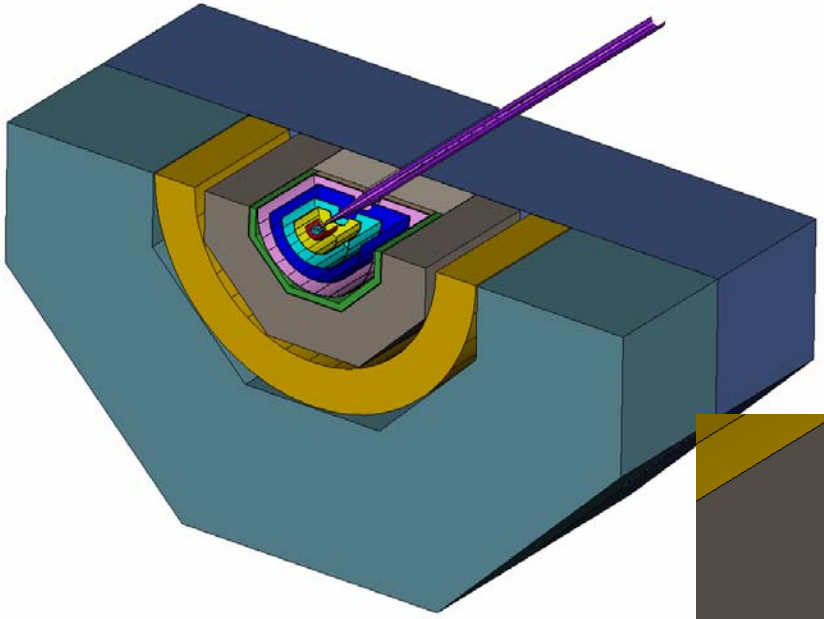

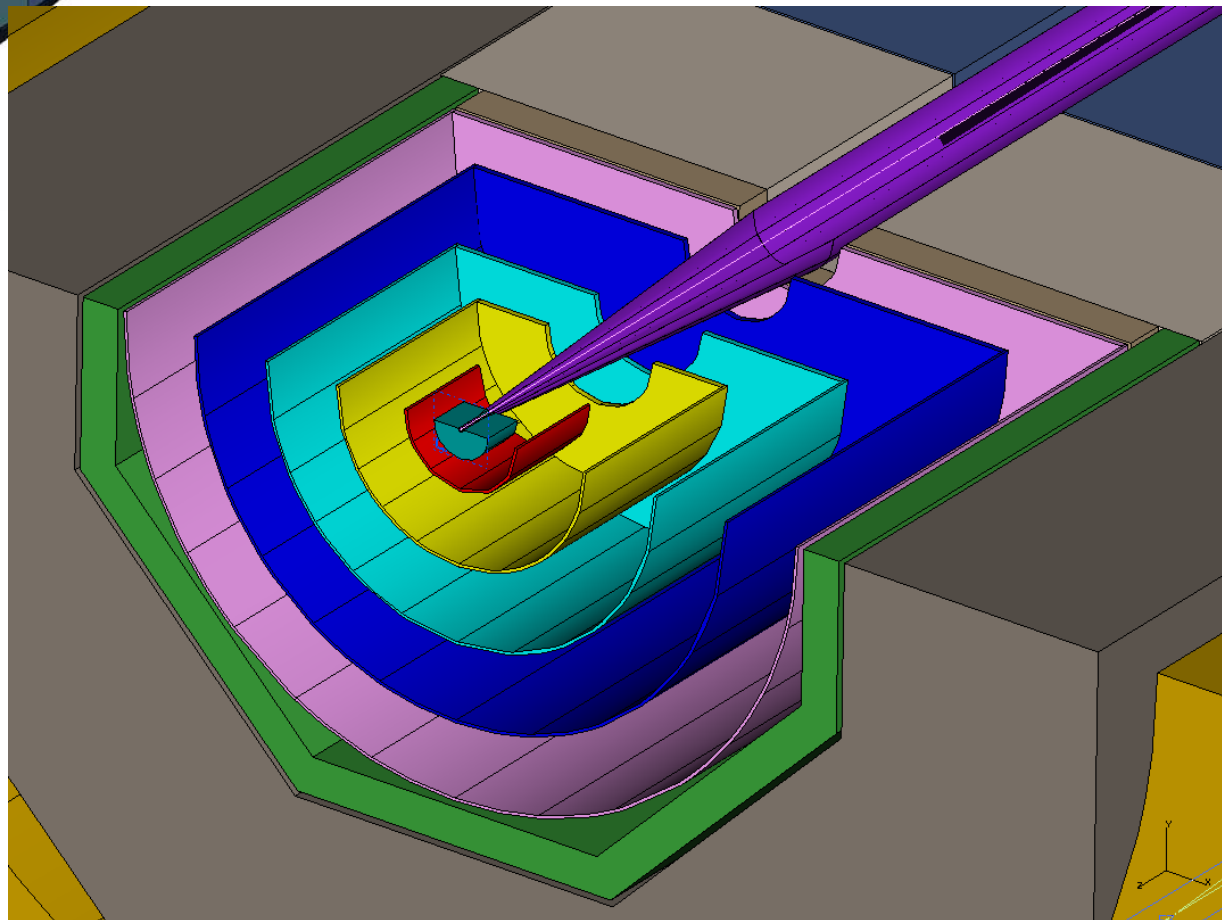

Vertex detector

H.Weerts

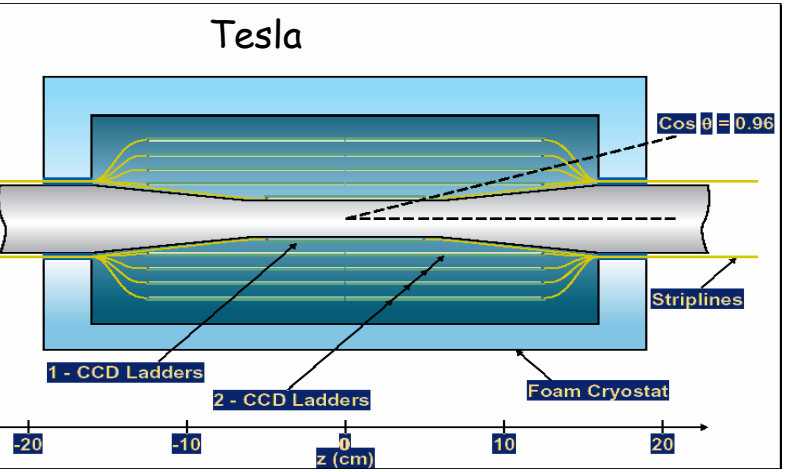

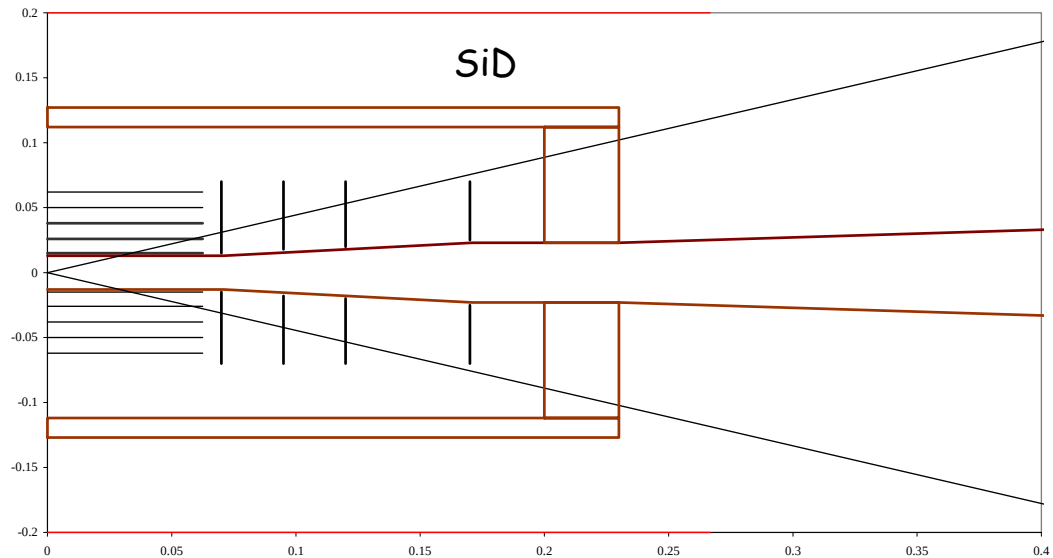

Build on SLD/VX3 success

Radius: inner ~1 –1.5cm outer 10cm, 0.2% X_0

Extend 5 layer tracking over max Ω (5 barrel + 4 forward layers)

→improve Ω Coverage, improve σ_{xy}, σ_{rz}

5 CCD layers $\cos\theta < .97$

4 CCD layers $\cos\theta < .98$

Minimize CCD area/cost

→ Shorten Barrel CCDs to 12.5 cm (vs. 25.0cm)

Thin the CCD barrel endplate

Tracking

H.Weerts

- Silicon; Inner radius 20cm outer radius 125cm; 5 layers
- **SLC/SLD Prejudice**: Silicon is robust against machine mishaps; wires & gas are not.
- Silicon should be relatively easy to commission – no *td* relations, easily modeled Lorentz angle, stable geometry and constants.
- SiD as a *system* should have superb track finding:
  - 5 layers of highly pixellated layers plus
  - 5 layers of Si strips, outer layer measures 2 coordinates
  - EMCAL provides extra tracking for V finding - ~1mm resolution!
- Minimize material before endcap calorimeter
- Simulation Studies have been and are underway
- Hardware developments (just starting)
  - Effort on ASIC…….. adapting for long bunch trains
  - Structure design work starting at FNAL

Silicon Tracking (cont'd)

H.Weerts

Structure and mechanical considerations

- Ladder configurations under study.
- Minimal electronics and power pulsing make gas cooling easy. No liquids, leaks or associated mass.

Initial thoughts on support structure

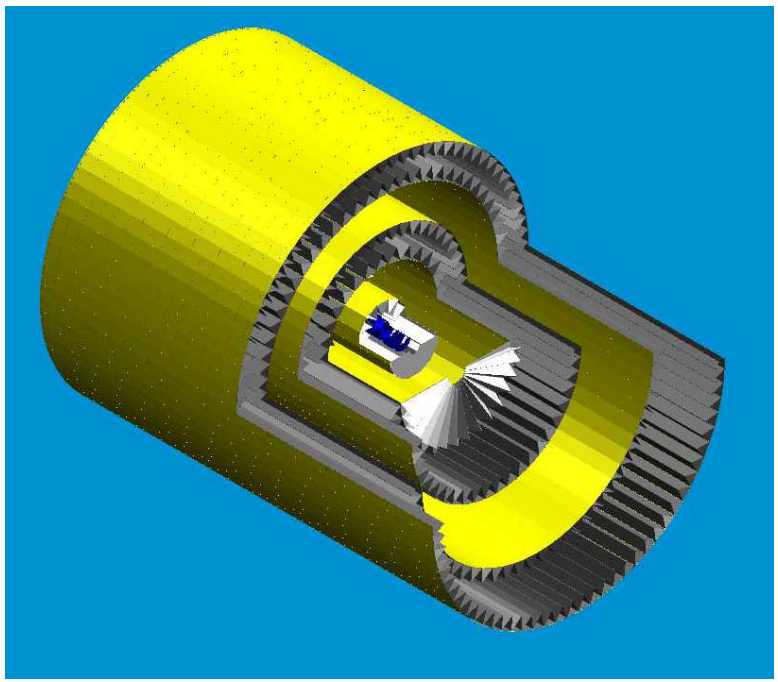

Long ladders evolved to shorter structures & cylinders

Support structure by Fermilab

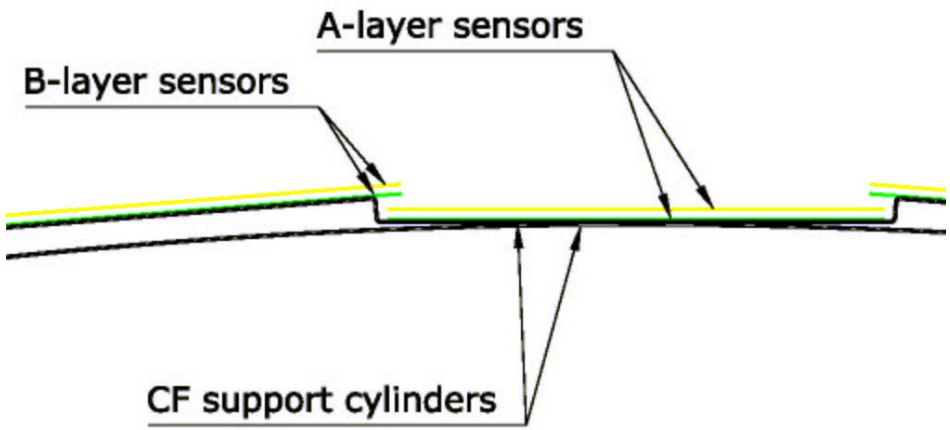

Use double carbon fiber support cylinders for each barrel

Moving beyond the starting point

H.Weerts

- Options 1 & 2 B. Cooper, FNAL
- Support Si on C fiber/Rohacell sandwich cylinders and disks ($X=.002X_0$)
- Whole assembly rolls out along beamline VXD/beampipe access
- Very forward tracking system mounted on beam pipe
- Stagger layers to avoid material overlap
- Pattern recognition questions remain
  Barrel: axial only? A + S ?
  Endcap: ~radial only? R + S? XUV?

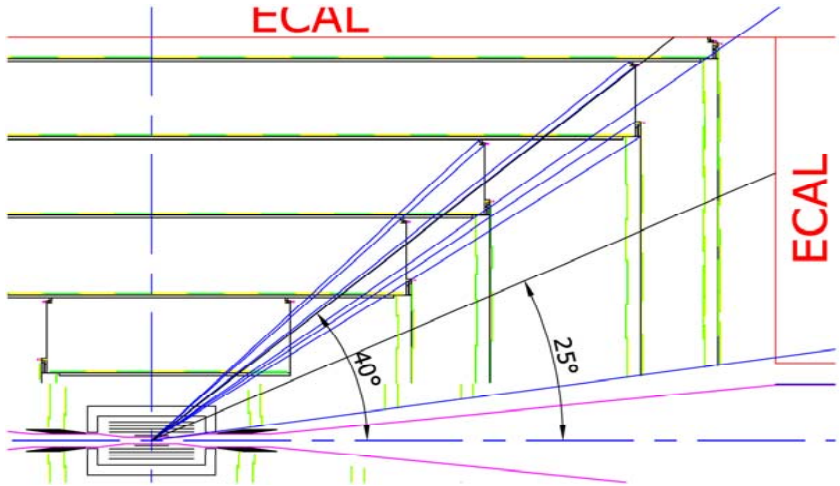

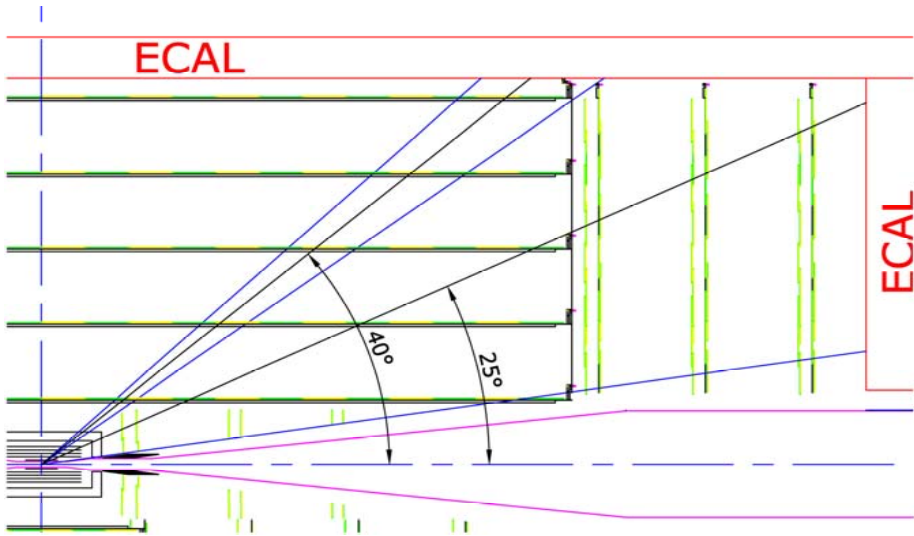

SiD EMCal concept(1)

H.Weerts

Design driver

Inner radius: 1.25m , outer radius 1.41 m; 29 X_0

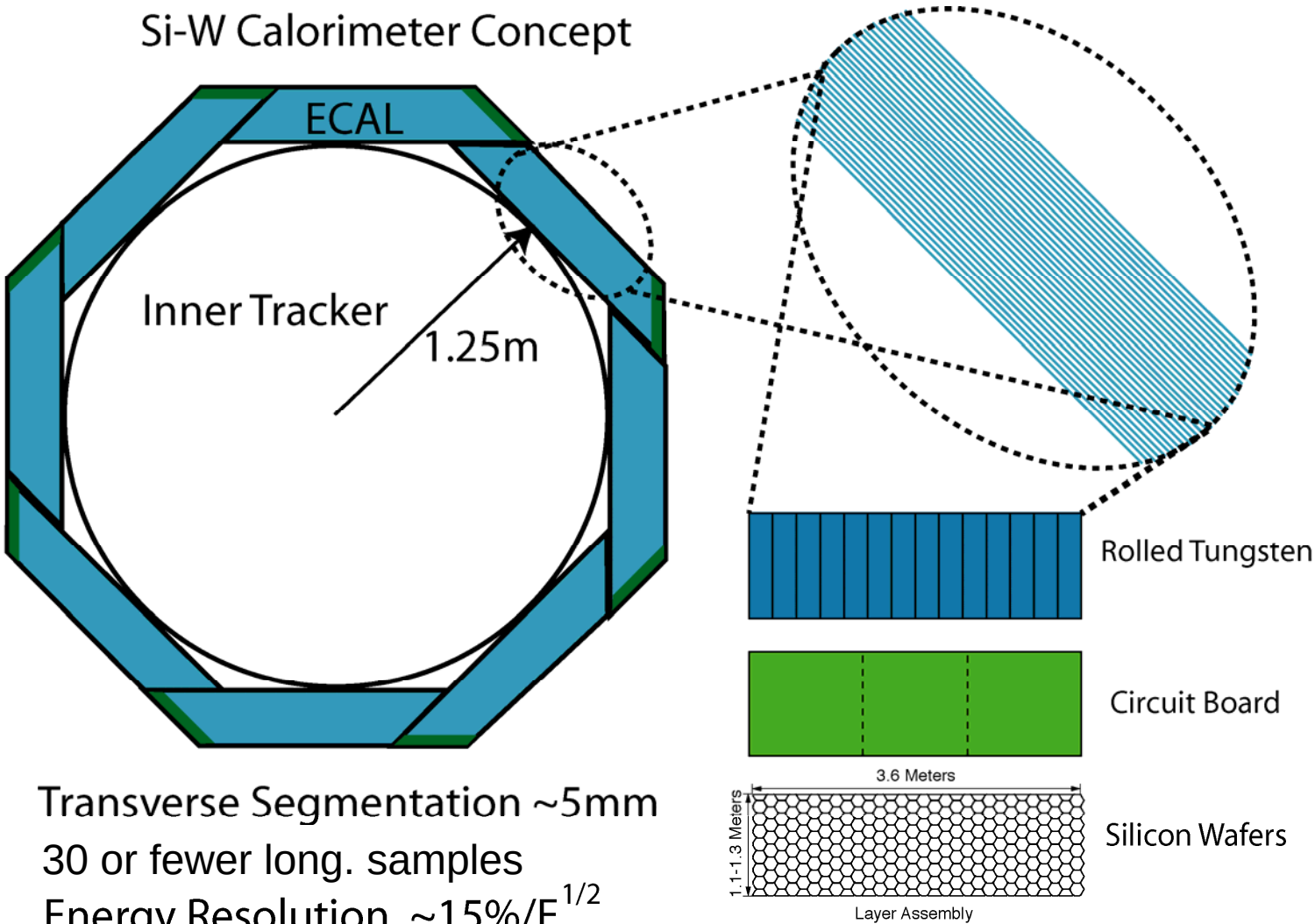

Transverse Segmentation ~5mm

30 or fewer long. samples

Energy Resolution ~15%/$E^{1/2}$

SiD concept EMCal (2)

H.Weerts

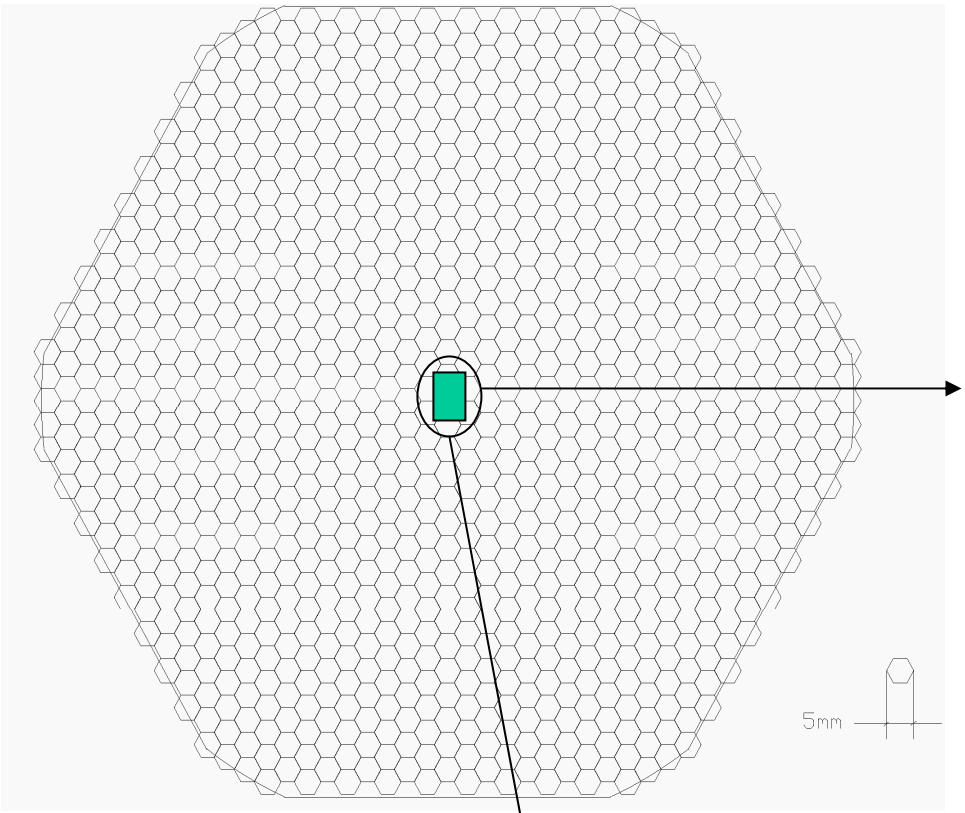

Wafer and readout chip

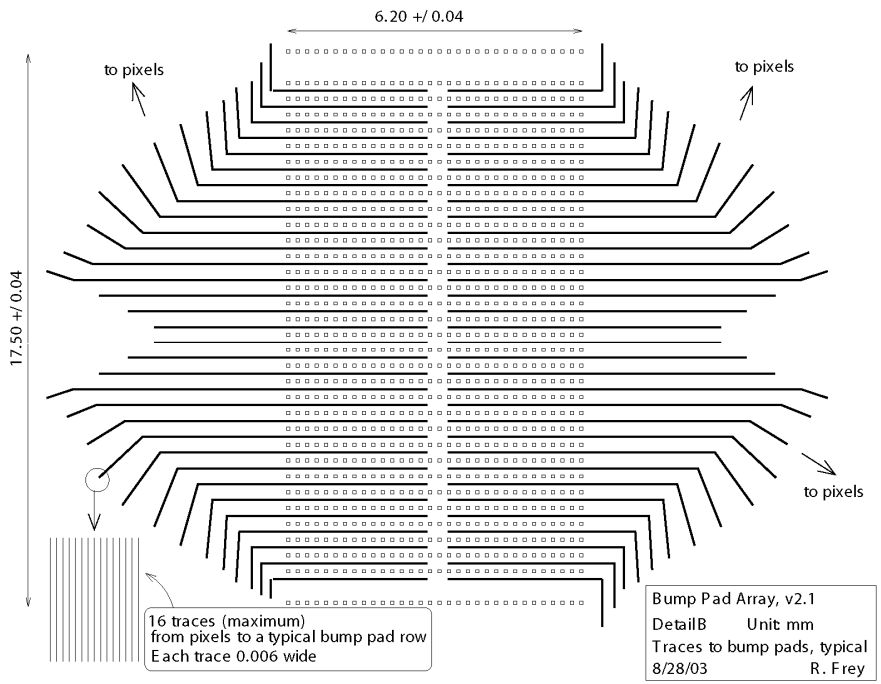

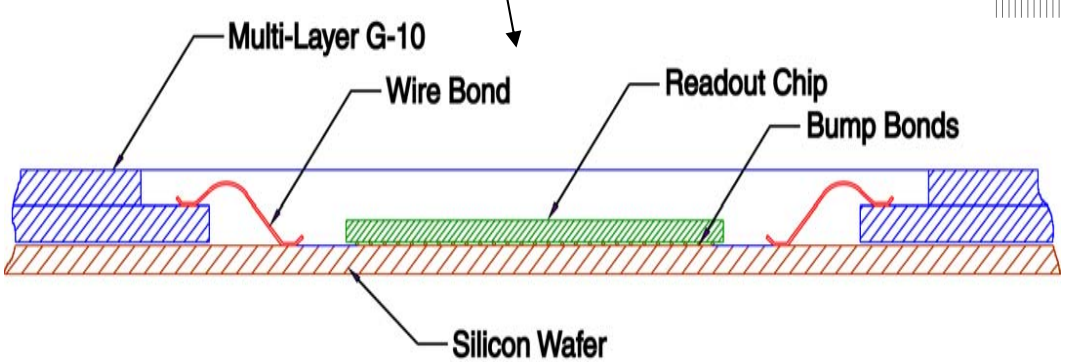

Concept: many channels (1-2K) on one ASIC

HCAL

H.Weerts

Inside the coil

Inner Radius ~ 1.42m, outer radius ~ 2.44m; thickness ~4Λ
34 samples; 2cm Fe, 1 mm gap

Technology not specified, dependent on ongoing vibrant Calorimeter R&D

Several possibilities:
- Digital or Analog or mix
- RPC's
- GEM's
- Scintillator (SiPM, APD,……)

Initial starting assumption: use Fe as absorber

Solenoid

H.Weerts

Inner radius: ~ 2.47m to ~3.32m, L=5.4m; Stored energy ~ 1.1 GJ

Need feasibility study in next year to at least convince ourselves that 5T can be built .

Expertise not readily available. CMS solenoid sets current scale.

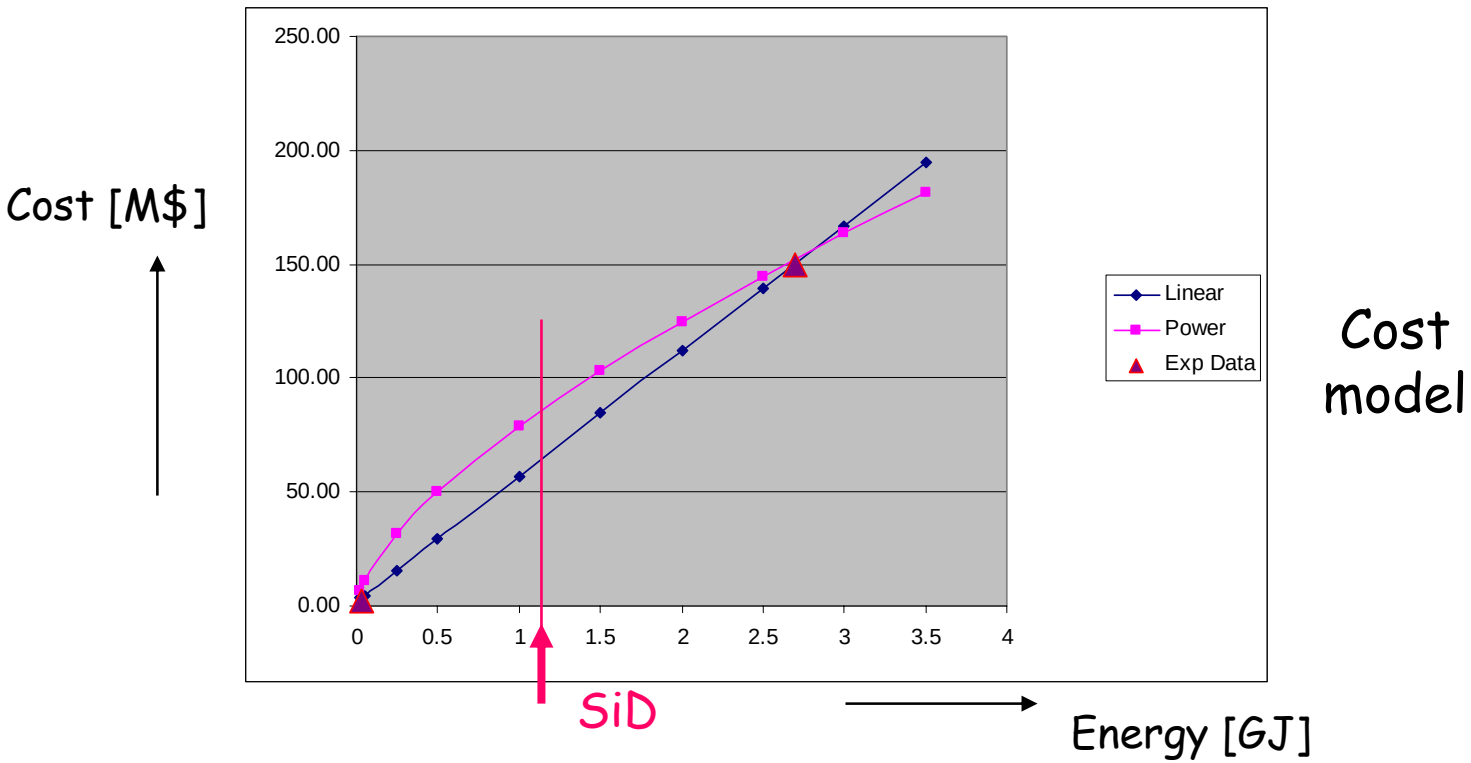

Cost model

Does physics really require 5T?

Muon system/Flux return

H.Weerts

Inner Radius ~ 3.35m, outer radius ~ 6.34m;
44 layers; thickness ~14Λ

Flux return and muon ID, as well as tail catcher for HCal

Technology not specified, dependent on ongoing Muon R&D

Possibilities:
- RPC
- GEM
- Scintillator (PMT and Si-PM)

SiD on a spreadsheet (1)

H.Weerts

Tool by M. Breidenbach

Parameterize the major subdetector boundaries and parameters
Put in cost for materials (per kg for absorber)
Cost for detector elements (per m^2)
A solenoid cost model
Create sliders to change parameters like absorbers, gaps, barrel/forward transition, BR^2, HCAL in or out of coil, etc

Allows one to:

Make a simple drawing detector
Track components/material needed for options
Do simple cost comparisons of options
Identify cost drivers

Very useful tool for overall detector concept/design

SiD Design Study endpoint

H.Weerts

Even though we have a starting point, the resulting final optimal detector configuration is not clear.

Will depend on results of study, new ideas, inputs, simulations and last but not least the participants in the study

Obviously no conclusions yet

...

We have started

....

because work is ahead of us

END

Relative Detector Configurations

H.Weerts

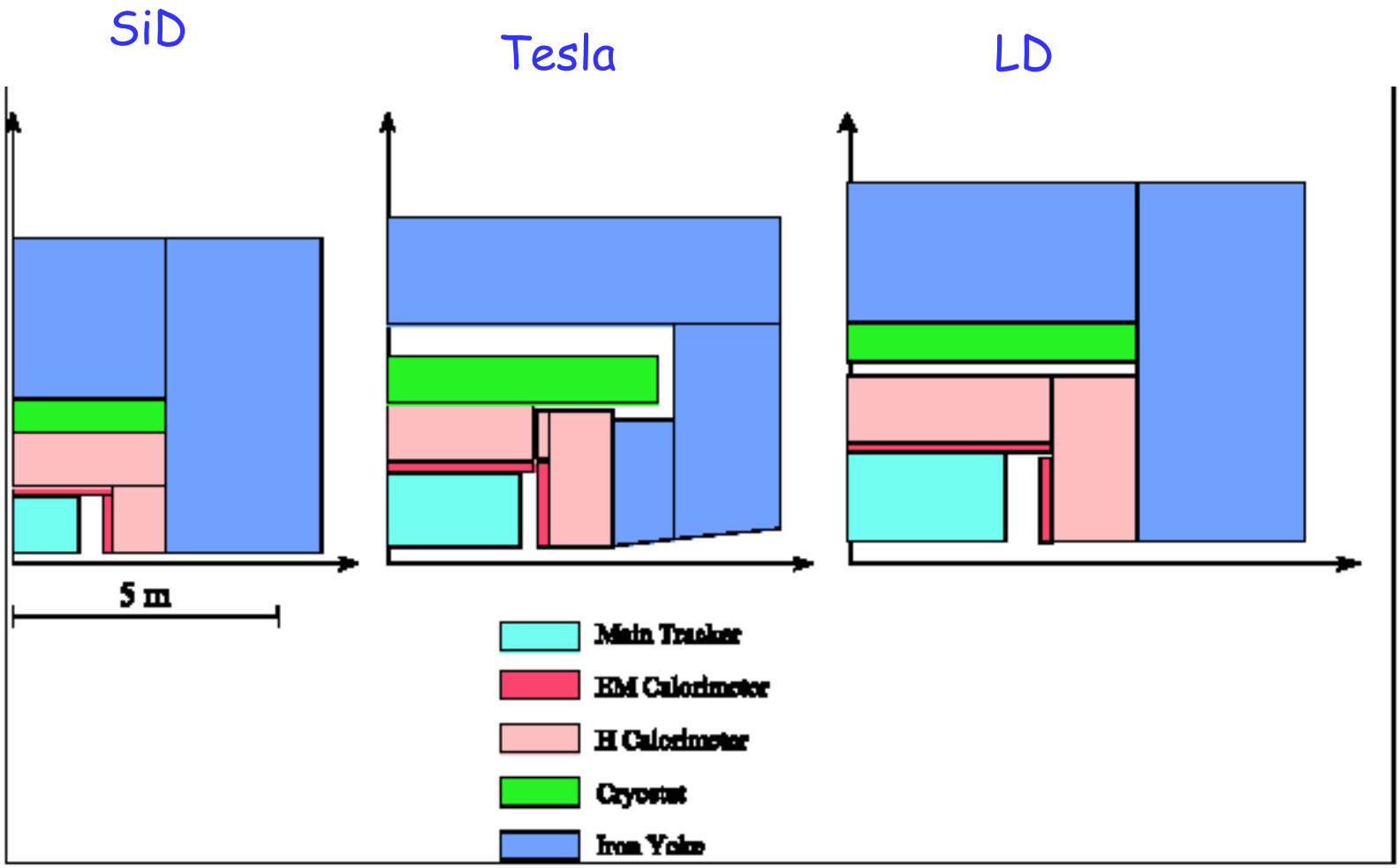

From Sachio Komamiya