Argonne NATIONAL LABORATORY

... for a brighter future

Numerical Studies of ILC Positron Target Operation in OMD Magnetic Field

S. Antipov, L. Spentzouris, W. Liu and W. Gai

ILC Positron Source Collaboration Meeting

September, 17 – 19, 2007

U.S. Department of Energy

UChicago Argonne LLC

A U.S. Department of Energy laboratory managed by UChicago Argonne, LLC

Outline

- Introduction
- Simulation method
- Prototype (Cockroft institute) ILC target simulation
  - With constant OMD
  - With pulsed OMD
- ILC target simulation

ILC positron target: data for simulation

- Target is a conducting disk / rim ($\sigma \sim 10^6$, OD = 2 m, Thickness = 1.4 cm)
- Target rotates to prevent overheating at 2000 RPM rate
- There is a strong ~ Tesla – scale magnetic field near the target (optics)
  - Source can be stationary
  - Source can be pulsed

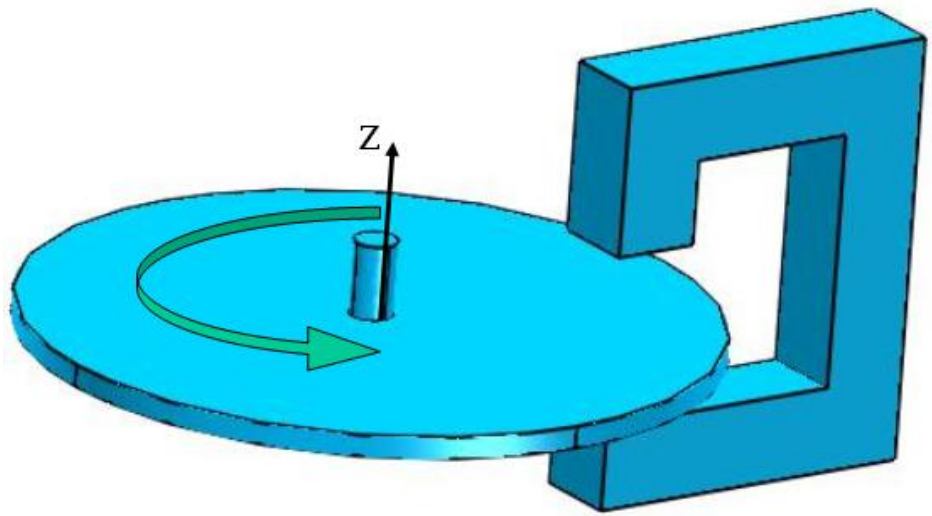

Problem:

- Simulate electrodynamics of a target, rotating in the presence of magnetic field (eddy current)
- Find forces and power requirements for the target
  - Drag force (tangential) → power requirement for rotation
  - Normal force → stress

Equation for induced field

$$\vec{E}_{total} + \boxed{\vec{v} \times \vec{B}_{total}} = \frac{\vec{j}_{total}}{\sigma}$$

- Rotation in magnetic field is equivalent to an effective EMF

$$\boxed{\frac{\varepsilon\mu}{c^2}\frac{\partial^2 \vec{B}}{\partial t^2} + \frac{4\pi\sigma\mu}{c^2}\frac{\partial \vec{B}}{\partial t} = \nabla^2 \vec{B} + \frac{4\pi\sigma\mu}{c^2} \cdot \nabla \times \vec{v} \times \left(\vec{B} + \vec{B}_0\right)}$$

Equation for induced field B

Stationary case B_0 = const → left-hand side = 0

$\vec{v} = \omega \cdot \{-y, x, 0\}$ - velocity, B_0-external, B-induced magnetic field

Cockroft institute prototype experiment simulation

Technical drawing provided by I.Bailey

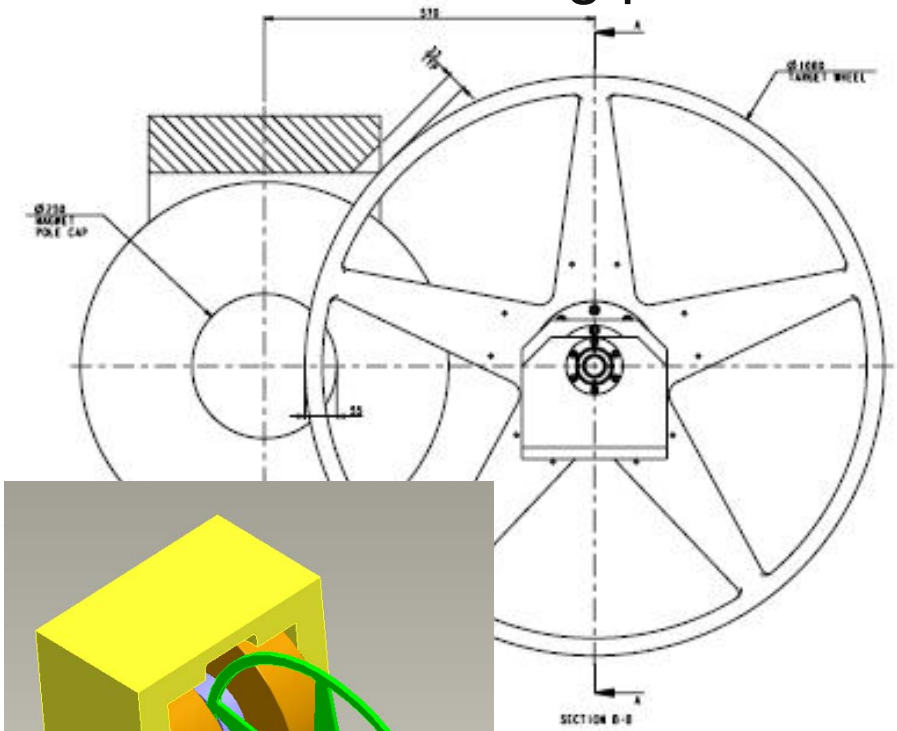

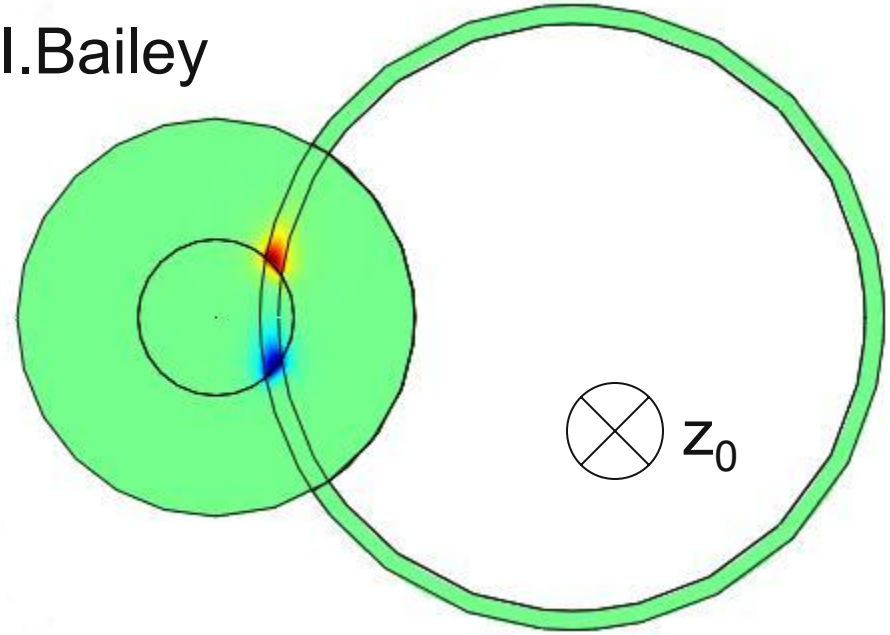

Simulation, Induced field, z-component, 2000RPM

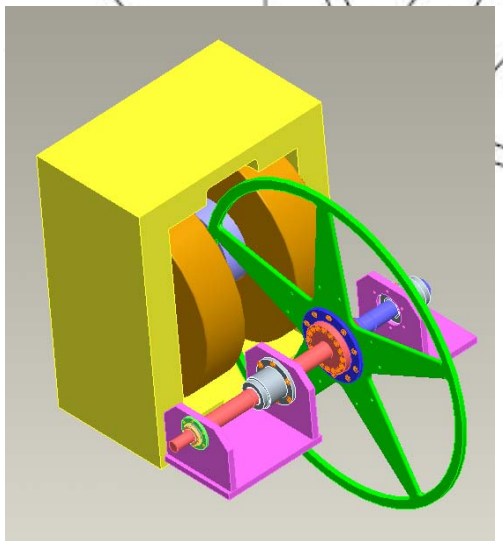

D – 1m, rim width – 30mm, rim thickness – 14mm, distance between magnet poles is 5cm, field – 1.5Tesla

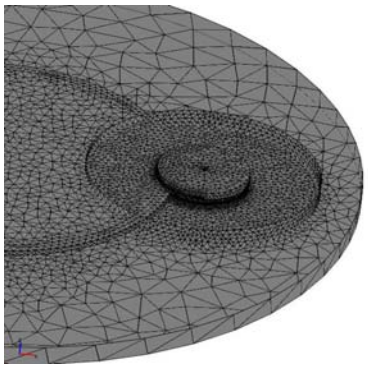

Simulation results for constant magnetic field

drag force for various conductivities

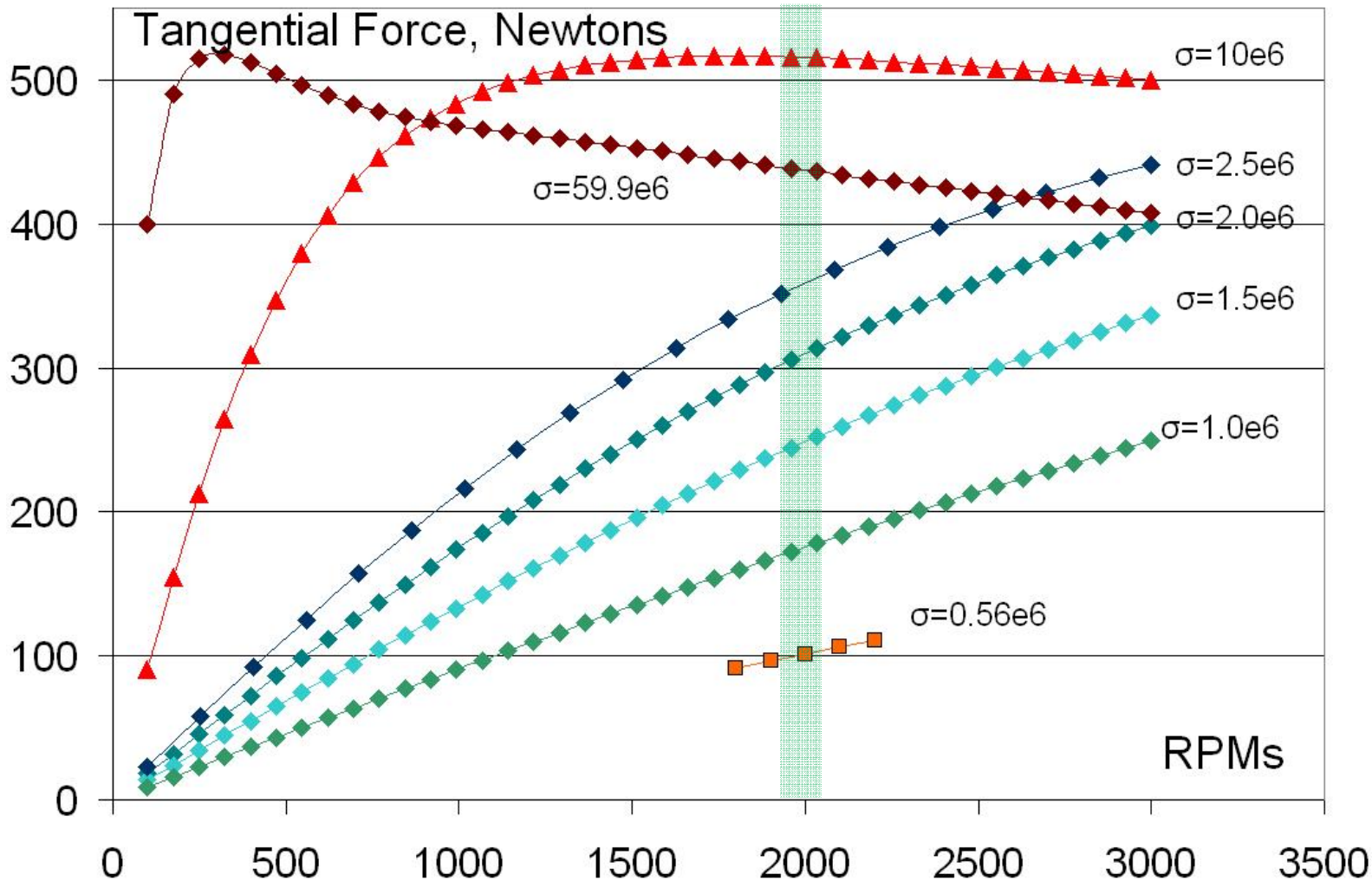

Simulation results for constant magnetic field

Power requirement for various conductivities

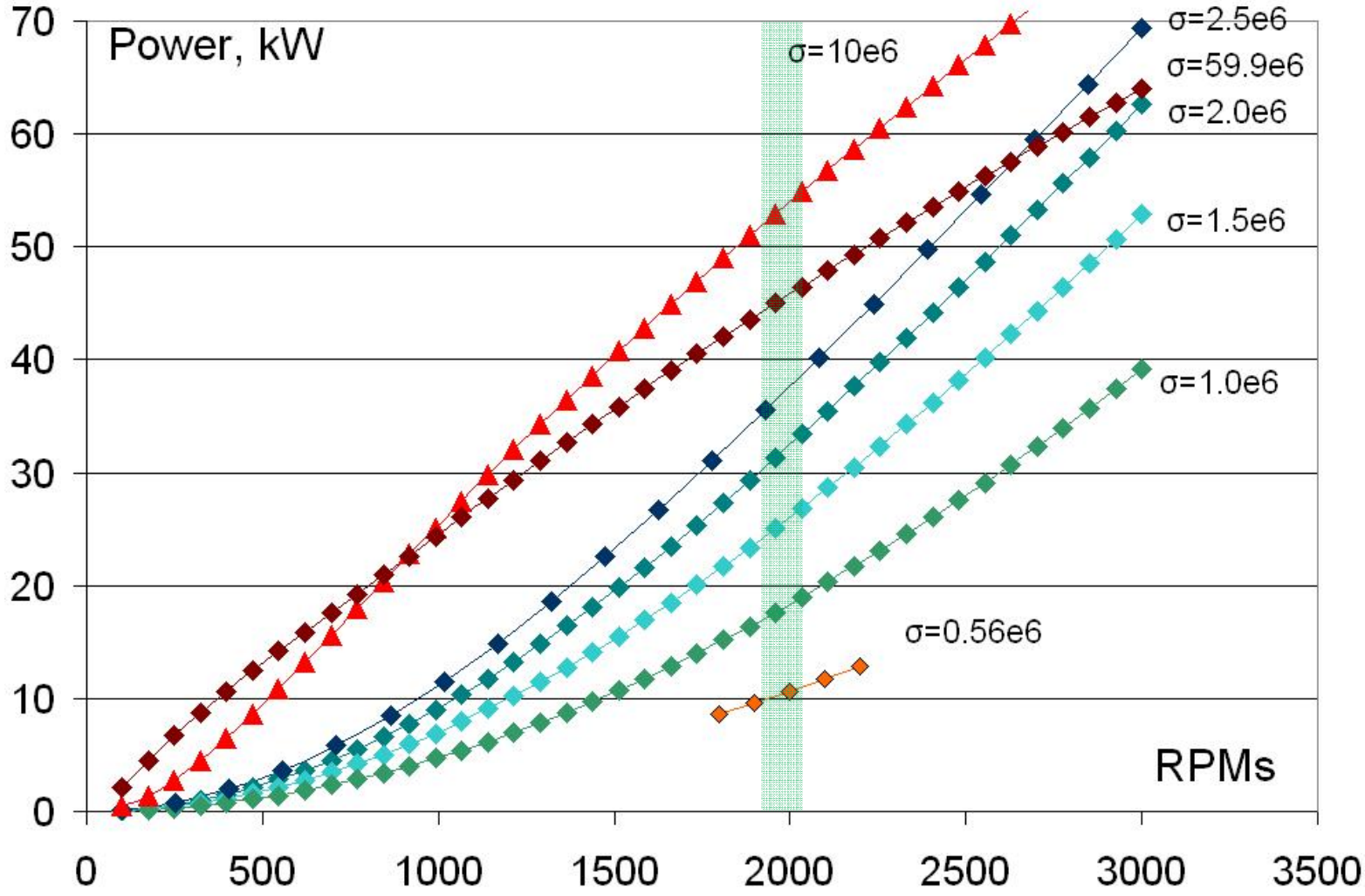

Simulation results for constant magnetic field

stretch force for various conductivities

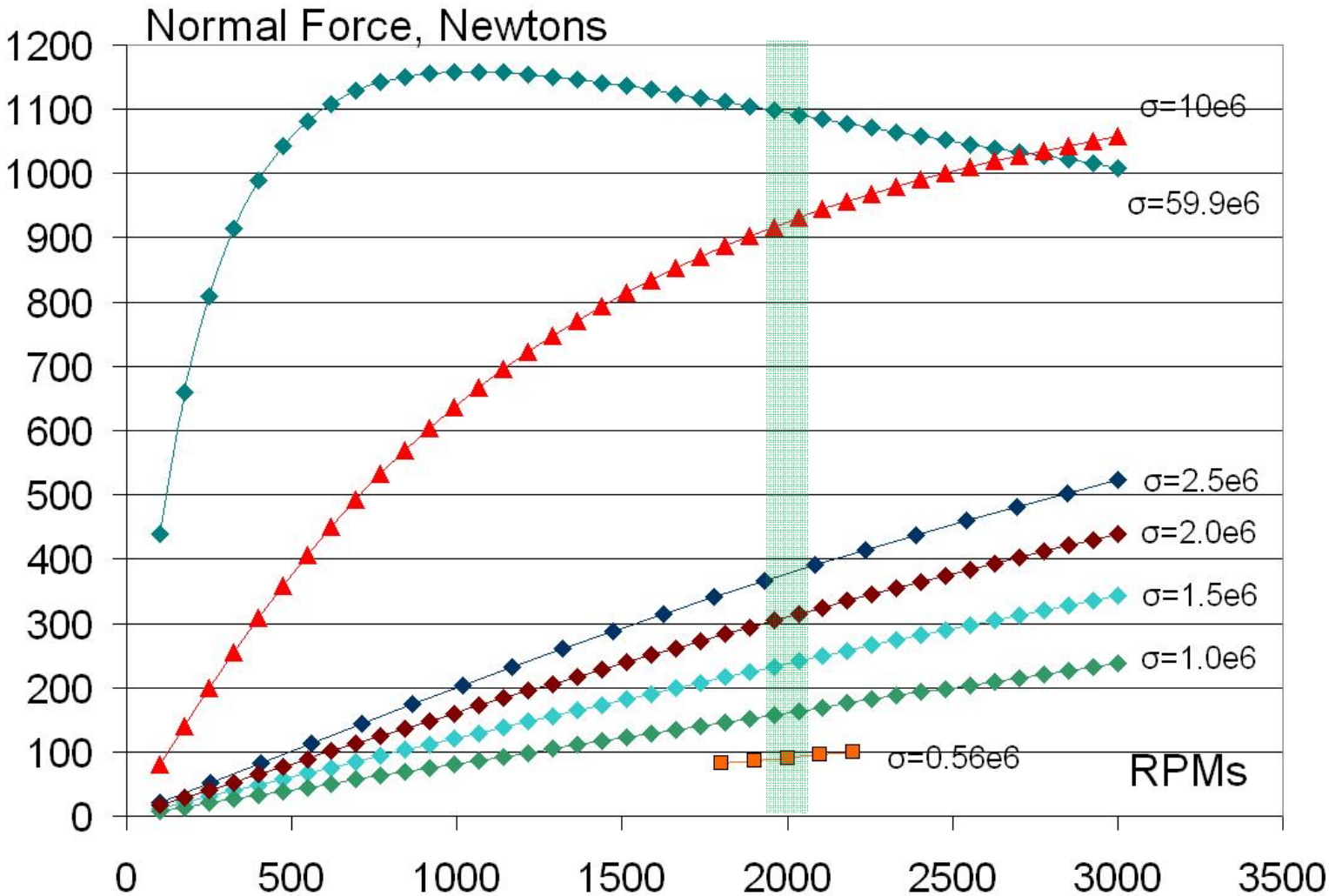

Time domain simulation of prototype

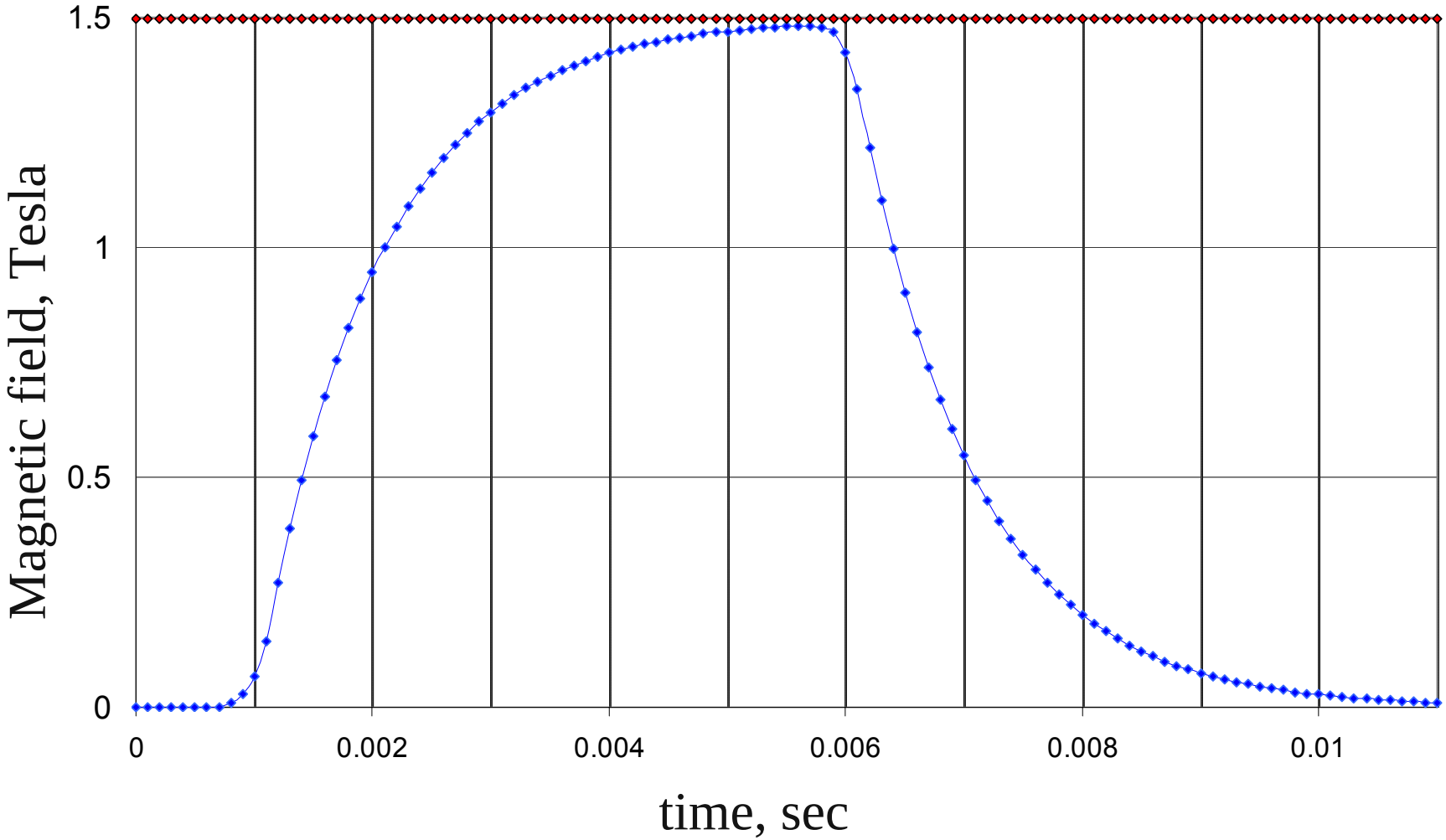

Comparison: pulsed OMD vs constant for $\sigma = 0.56 \cdot 10^6$

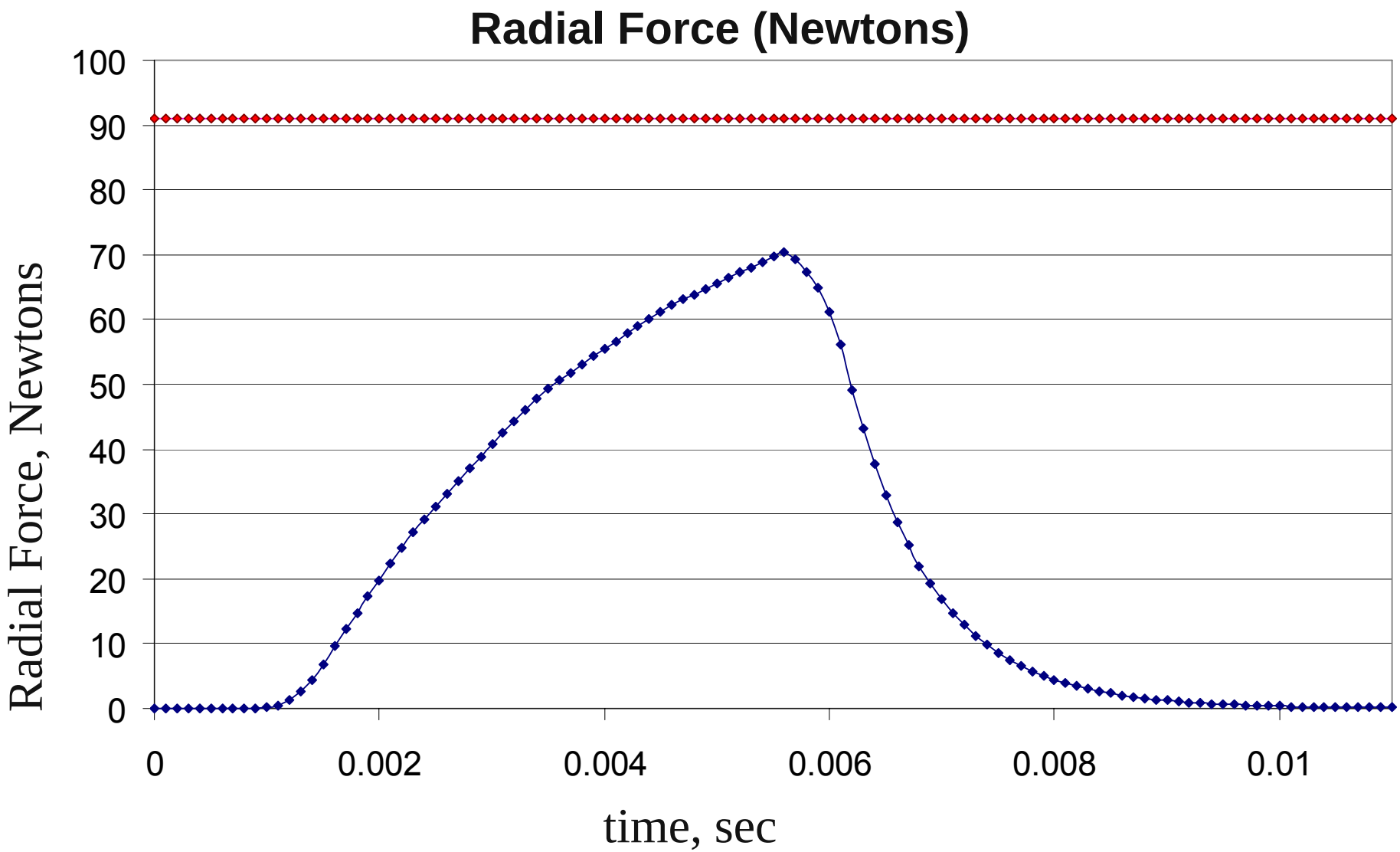

Comparison: pulsed OMD vs constant for σ = 0.56·10⁶

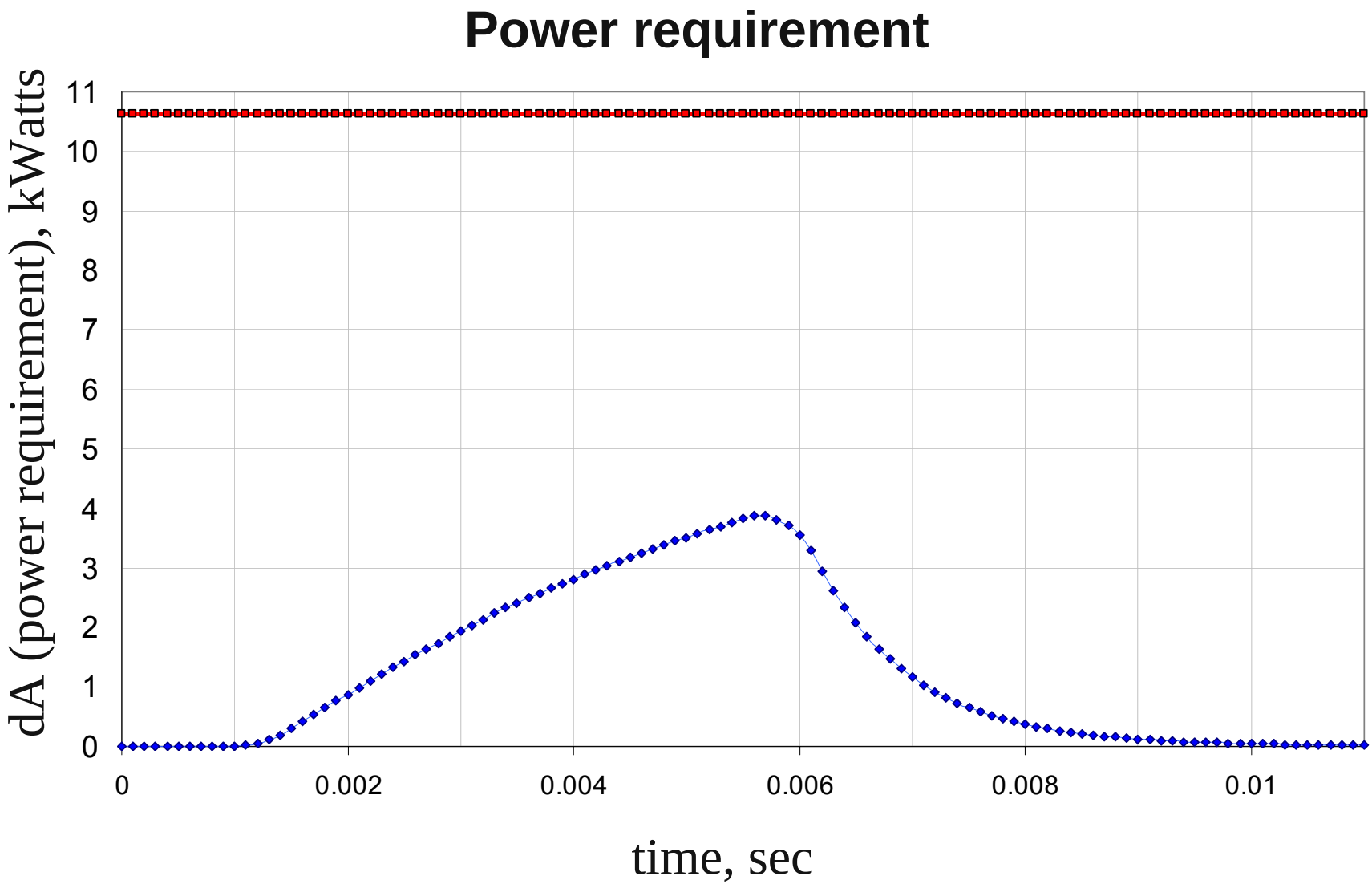

Comparison: pulsed OMD vs constant for $\sigma = 0.56 \cdot 10^6$

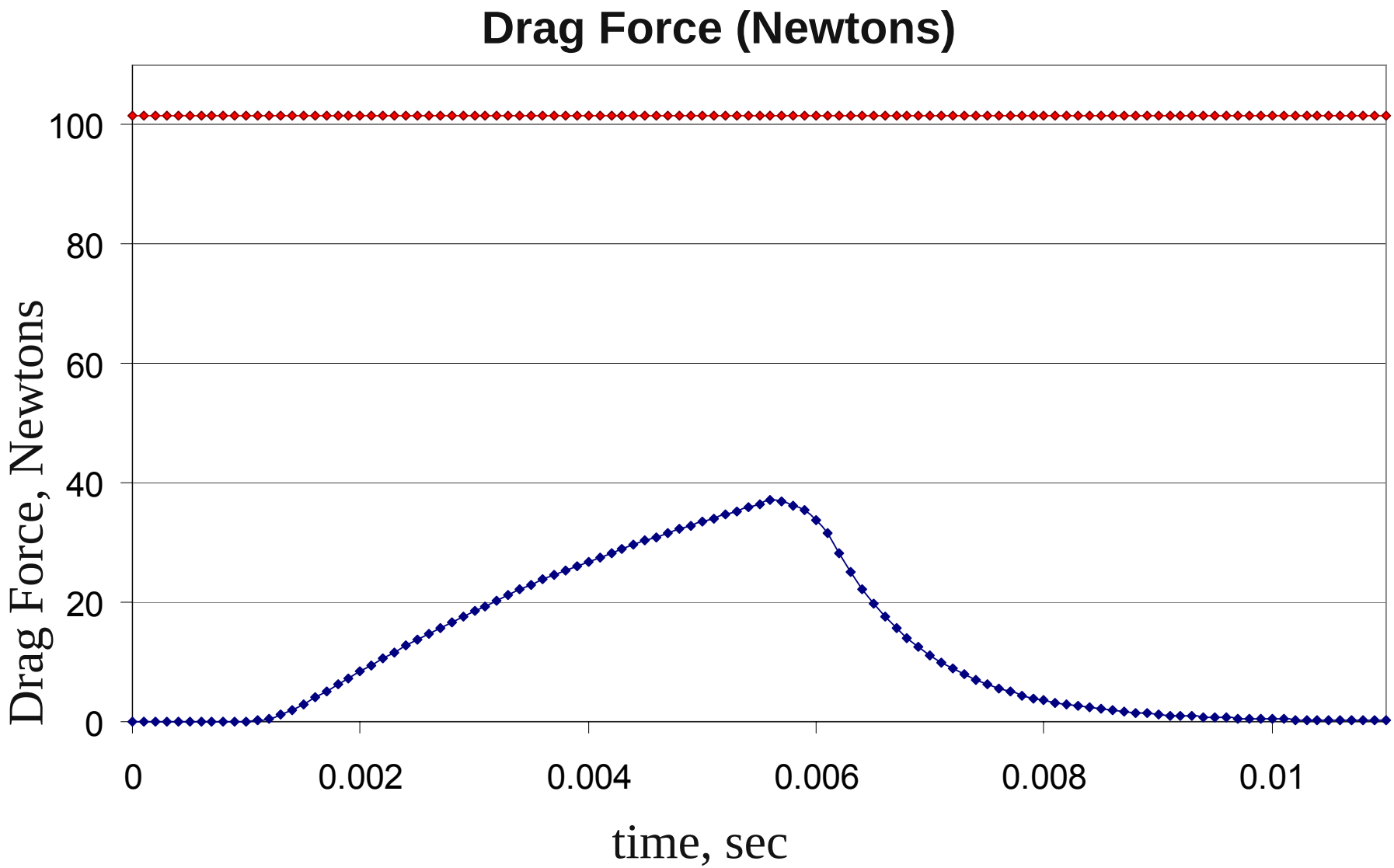

Comparison: pulsed OMD vs constant for $\sigma = 15 \cdot 10^6$

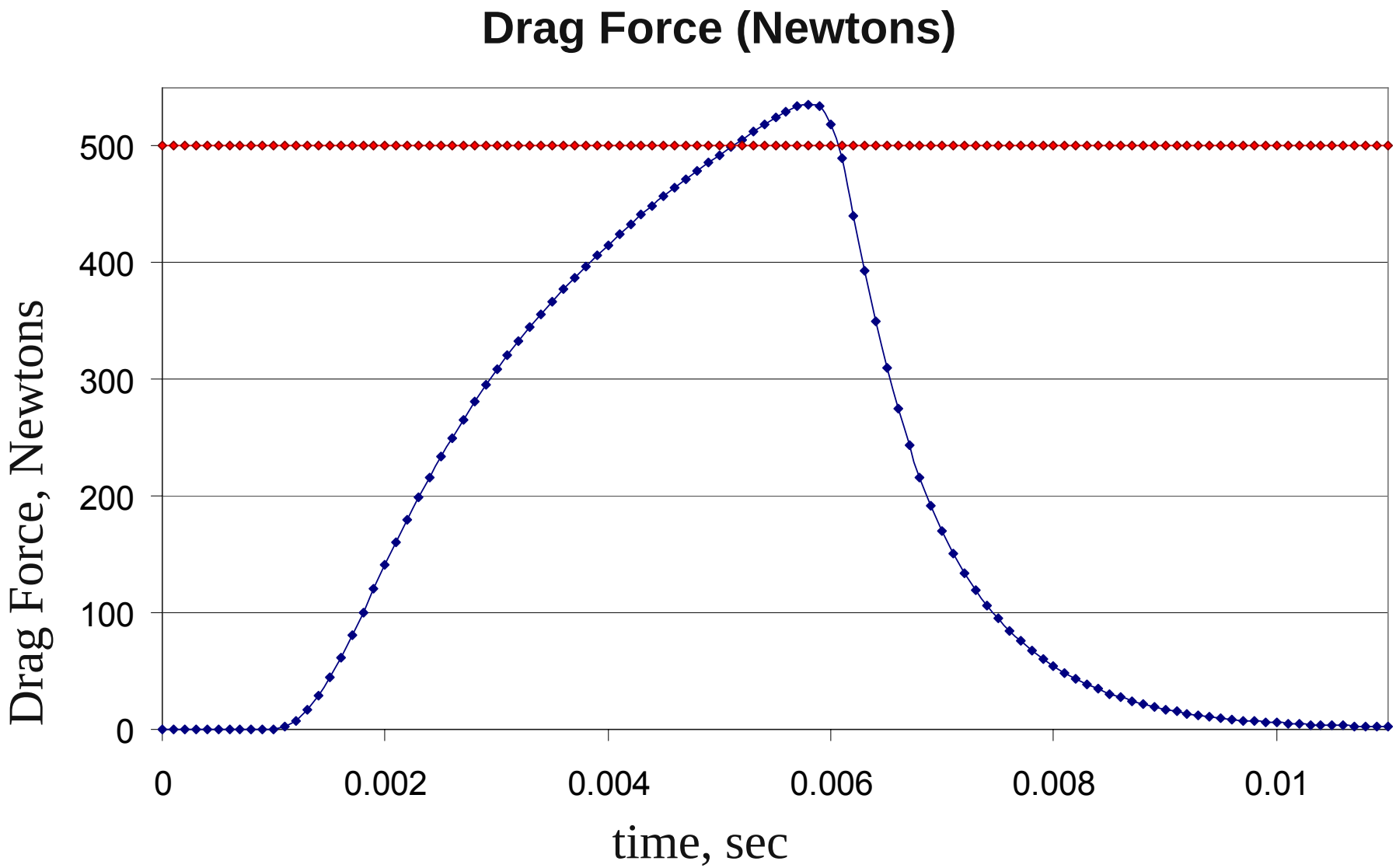

ILC target simulation geometry

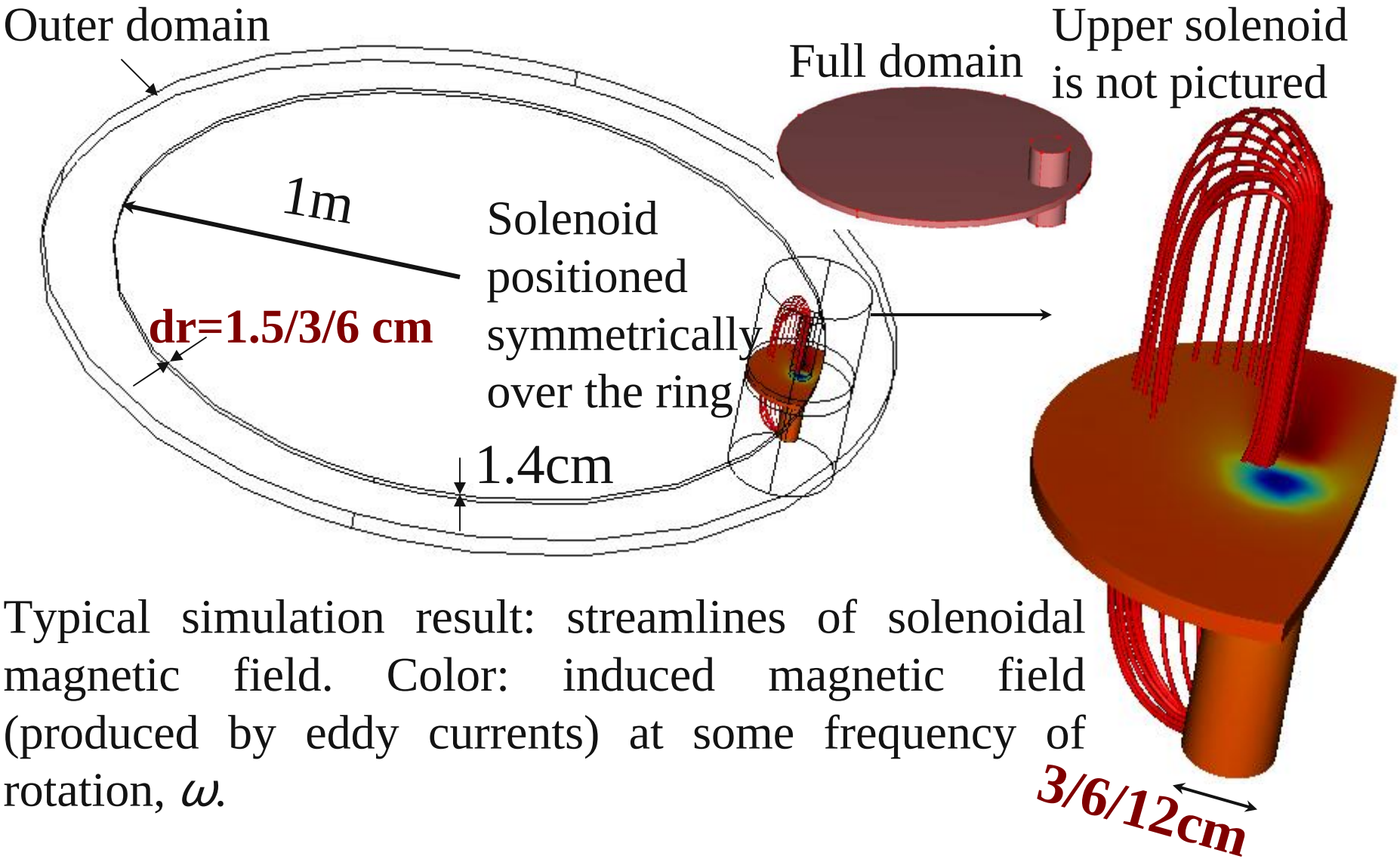

Typical simulation result: streamlines of solenoidal magnetic field. Color: induced magnetic field (produced by eddy currents) at some frequency of rotation, ω.

Results for σ = 1.5e6 @ 910 rpms, 5 Tesla

Ring width

Magnet aperture

	1.5cm	3cm
3cm	170kW@910rpm	332kW@910rpm
6cm	172kW@910rpm	433kW@910rpm
12cm	175kW@910rpm	463kW@910rpm

The power requirement will be even smaller for pulsed OMD

Field cancellation effect

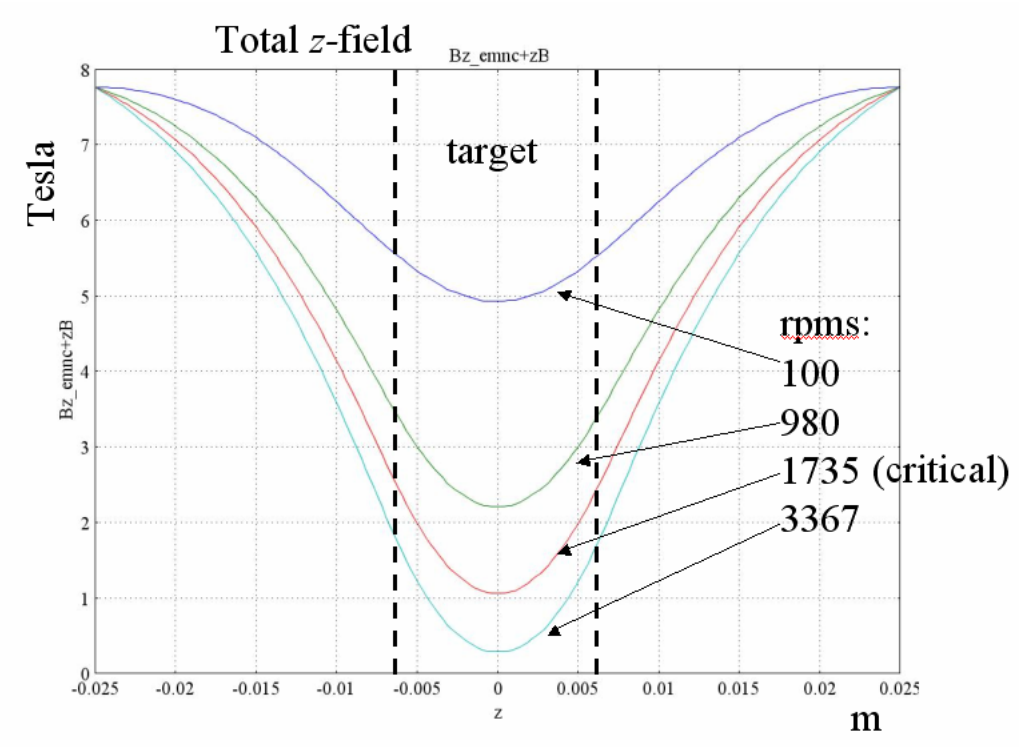

Field restores quickly

Induced field reduces the total field on the face of the magnet (5→2Tesla at 1000)

Initial x-x' of captured positrons with deflecting field produced by eddy currents

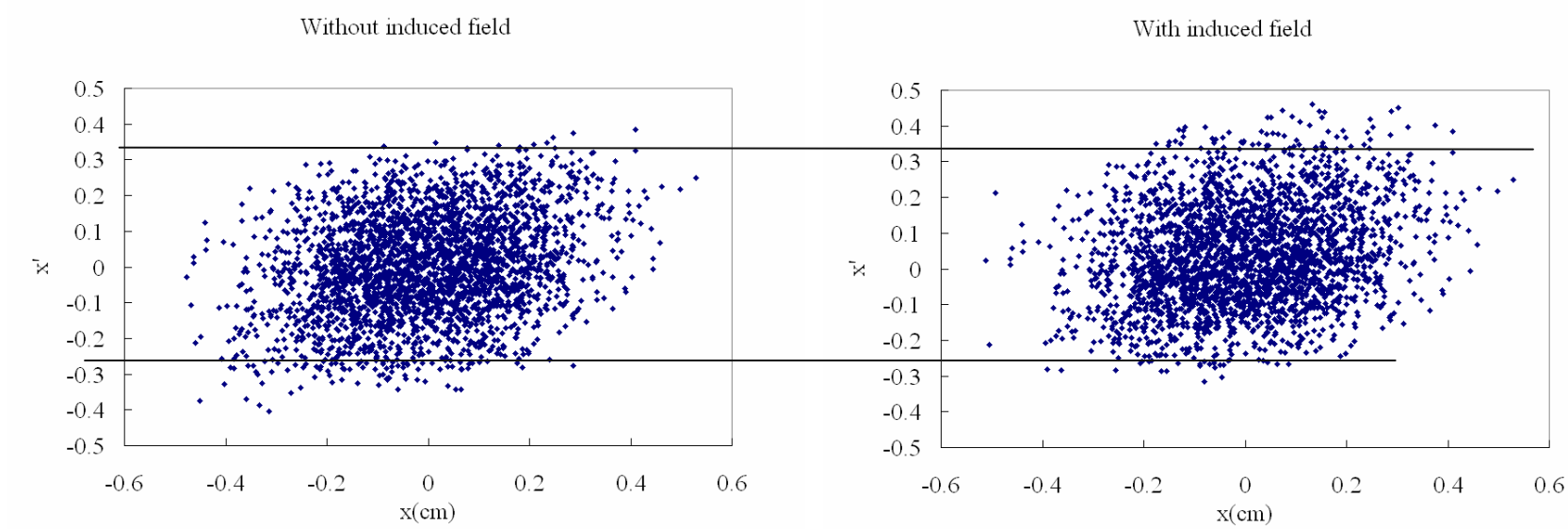

- Induced field kicked some positrons out but also kicked some in. The lost of yield is only ~5%(from ~1.27 down to ~1.20) for σ=3e6.
- For σ=1.5e6, since the eddy current induced field is small compared with the OMD field, and also due to the broad band matching provided from OMD field, the distortion of field does not cause any noticeable change to the e+ yield.

Summary

- We have developed a model for exact simulation of disk/ring spinning in a magnetic field
- The model was checked against the recent experiment by SLAC/LLNL collaboration
- The steady state and pulsed[new] (TD) simulations of a prototype target (Cockroft) were performed
- The parametric simulations of full-scale ILC positron target were performed
- Effects associated with the target rotation in OMD field were simulated

SLAC/LLNL experiment simulation: geometry

Disk, copper, 9 inch in diameter, 0.9 inch thick

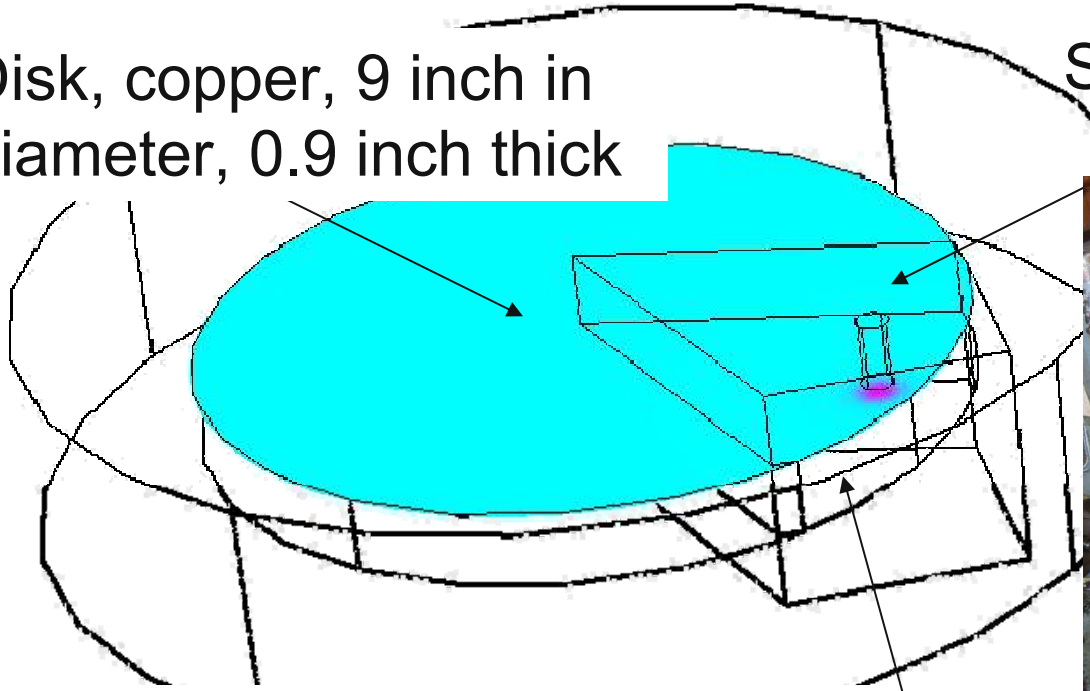

Single pole, constant field

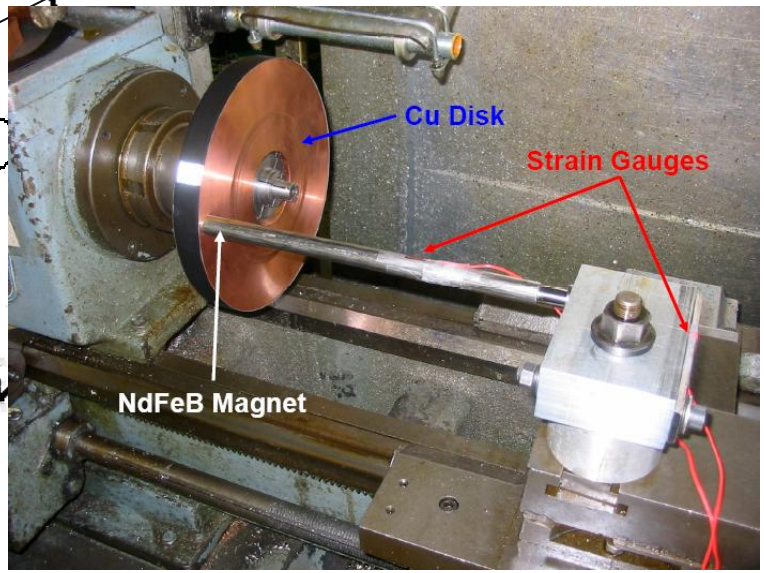

W. T. Piggott, S. Walston, D. Mayhall "Preliminary Investigations of Eddy Current Effects on a Spinning Disk." LLNL report. Sept. 2006.

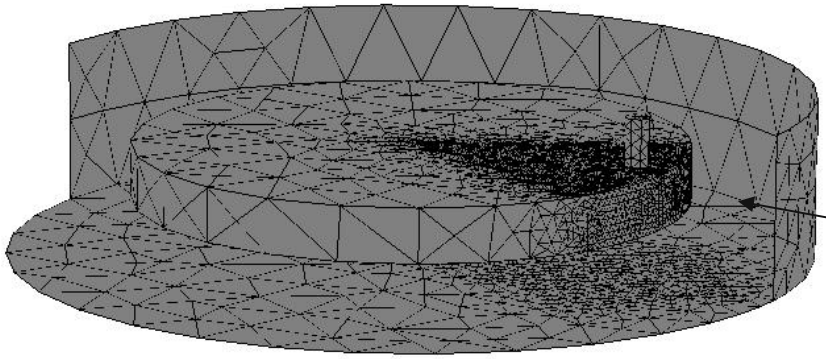

Artificial subdomain to improve mesh quality

Results comparison

Parameter – distance between the magnet and the disk

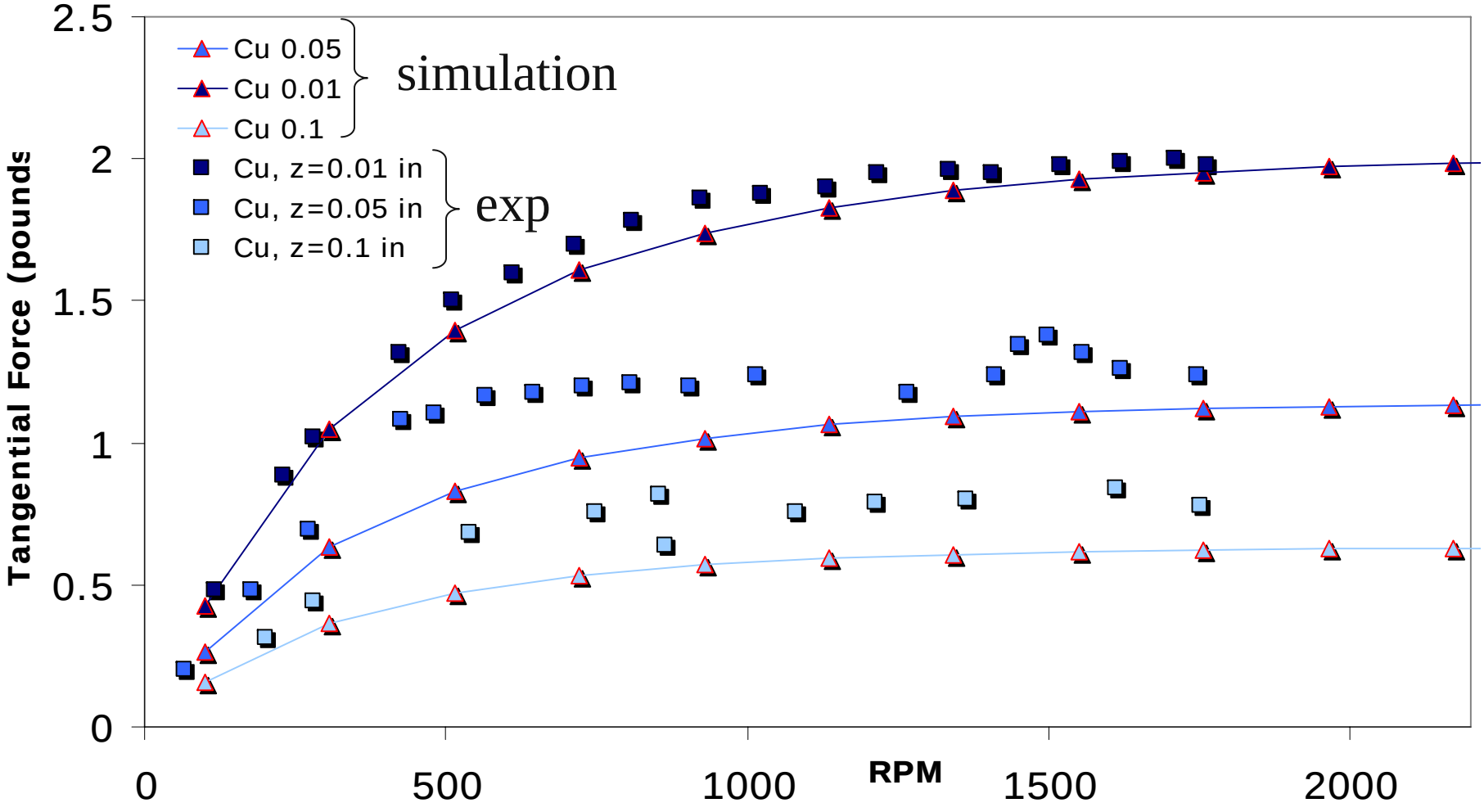
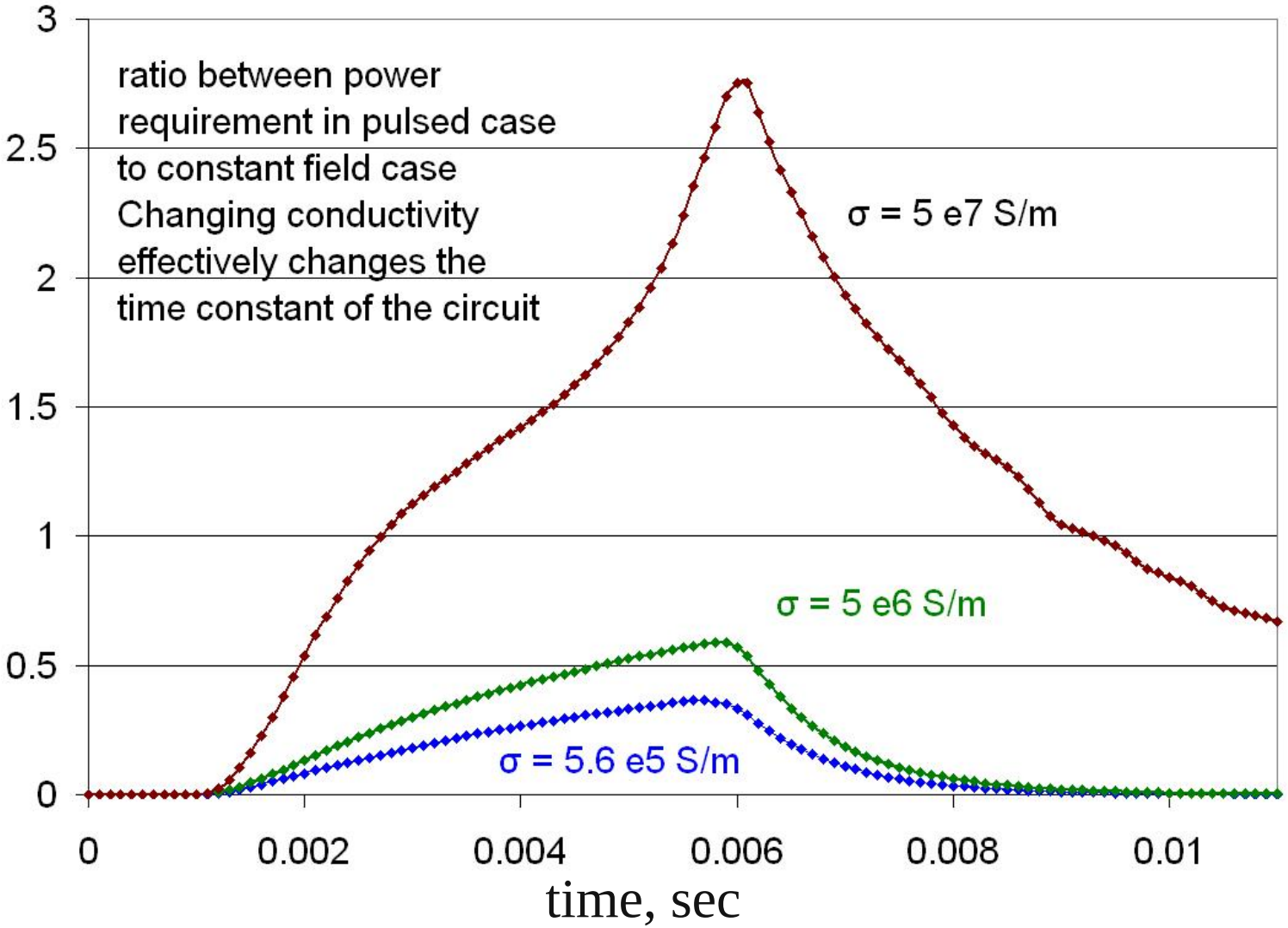
Power requirement as a function of conductivity