Modeling and Prototype Experiment of Flux Concentrator with Application in ILC Positron Matching

Haitao Wang, Wanming Liu, and Wei Gai

Argonne National Lab.

ILC Positron Source Collaboration Meeting

Sep. 17-19, 2007

A U.S. Department of Energy laboratory managed by The University of Chicago

Outline

- Introduction
- Circuit Model of Flux Concentrator
- Prototype Experiment
- ILC OMD Design Based on Flux Concentrator

Introduction of Flux Concentrator

- Normal conducting magnet, resistive to radiation,
- Work at pulse mode to reduce input power,
- Magnetic flux is shifted into small central region to enhance the field.
- Release mechanic stress on coil.

1: Primary coil,
2: Core,
3: Radial slot,
4: Bore.

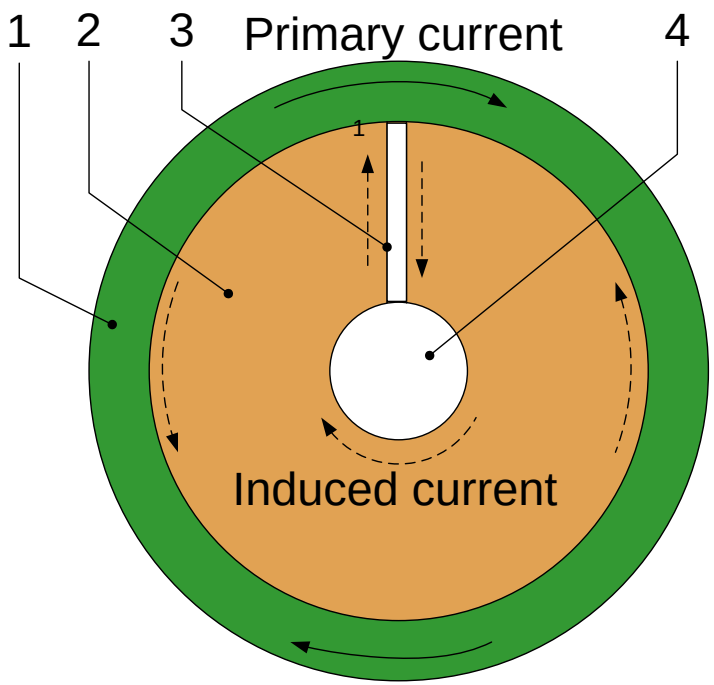

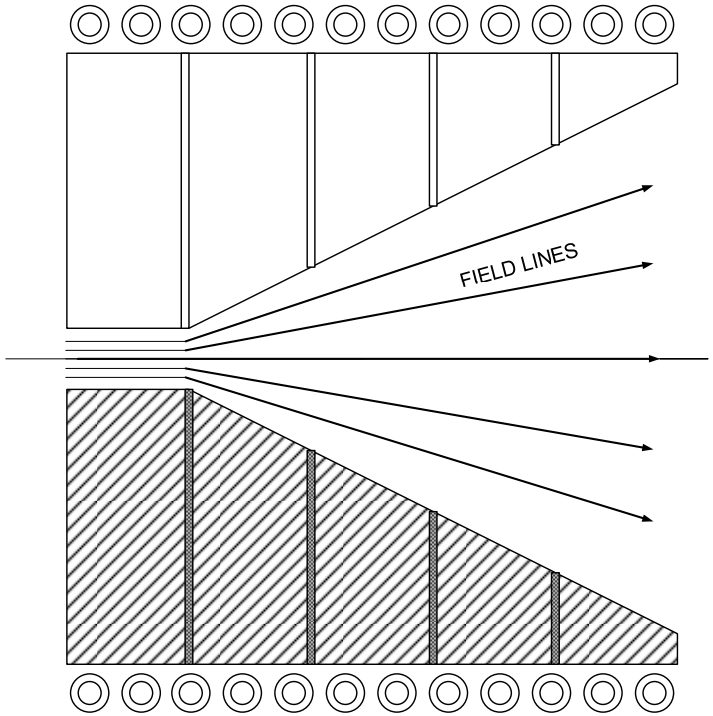

Modeling Approach and Geometric Division

Description of modeling approach

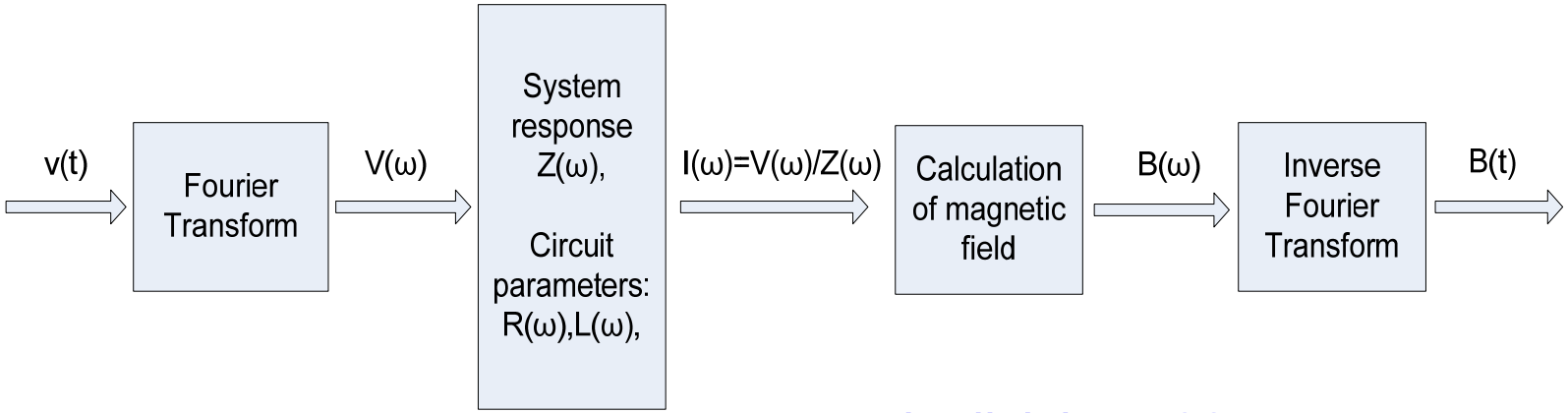

Geometric division of flux concentrator

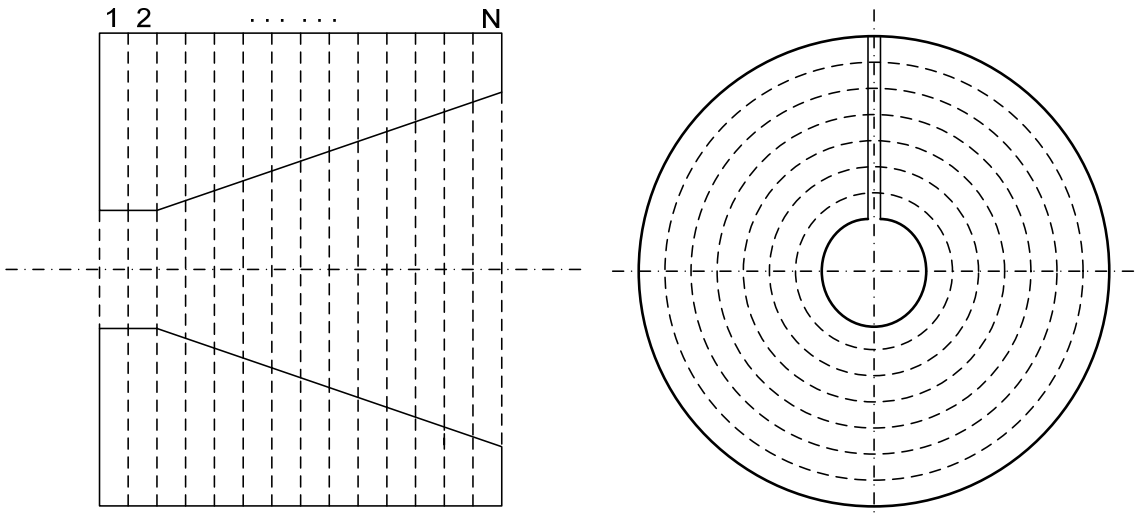

Modeling of Flux Concentrator

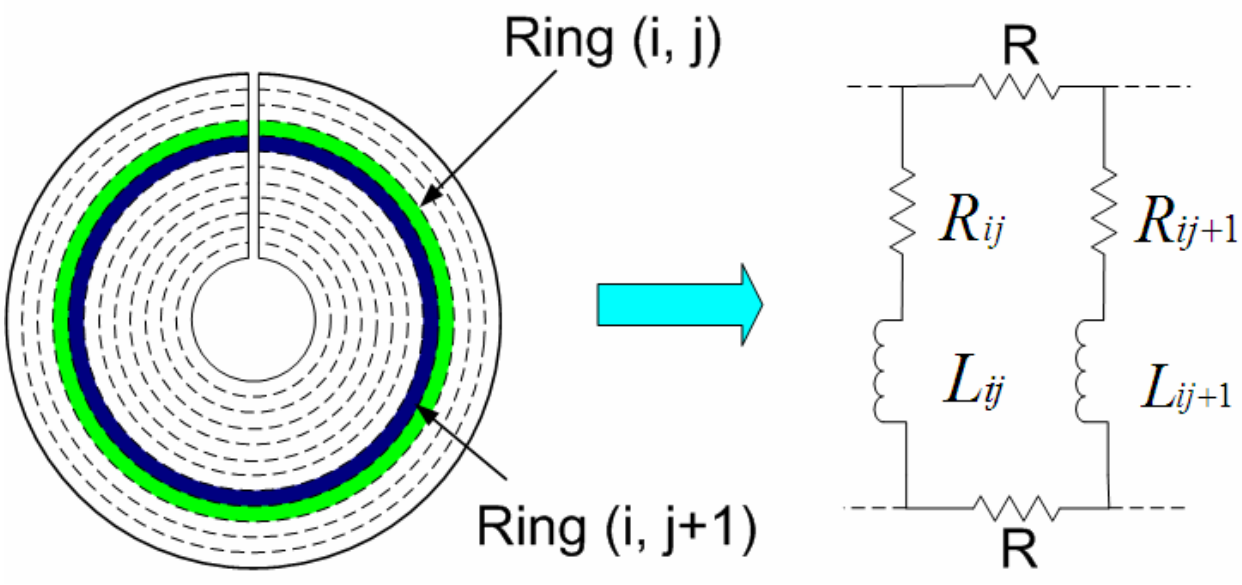

Coupling between any two rings

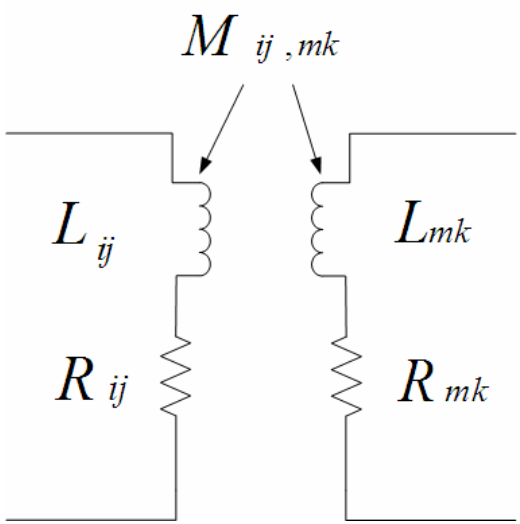

Coupling between coil and ring (i, j)

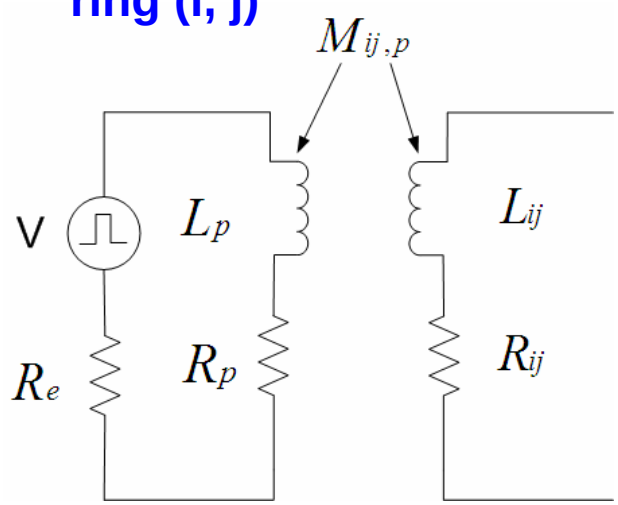

Geometry of Prototype Flux Concentrator

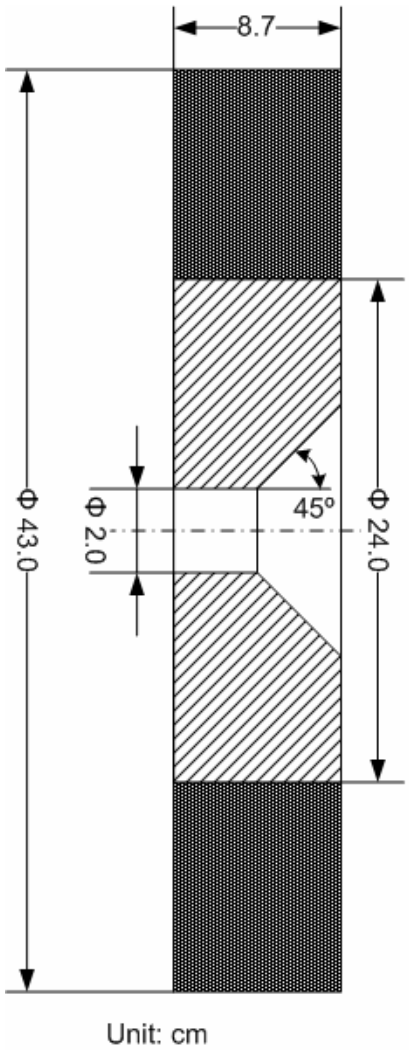

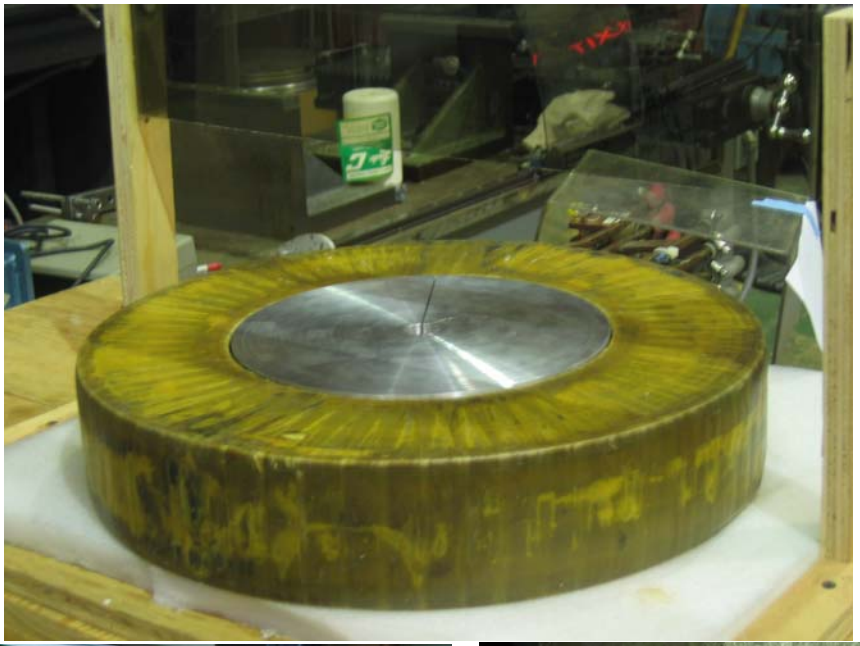

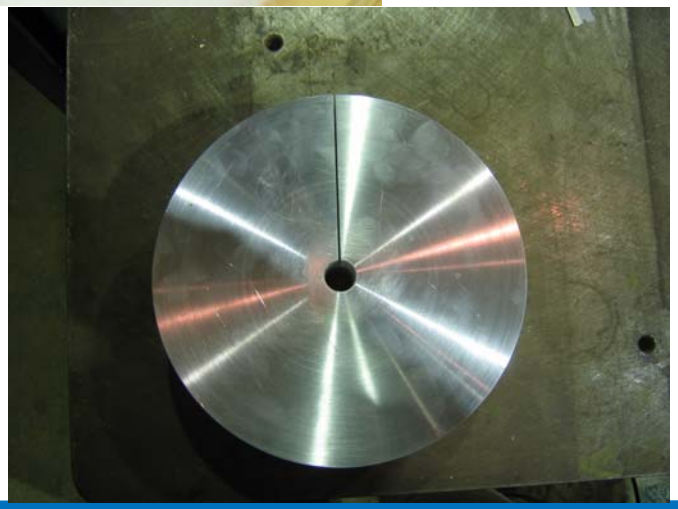

Measurements of Transient Responses at room temperature

- **Two kinds of configurations:**
  - Coil-Only Configuration
  - Flux Concentrator

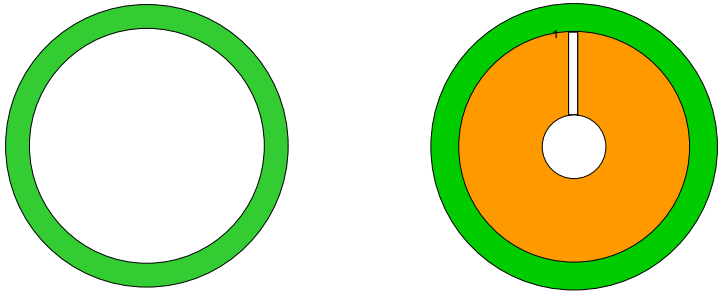

- **Transient responses to be measured:**
  - Voltage at the coil terminals,
  - Current flowing through the coil,
  - Magnetic field at the central axis of the coil assembly.

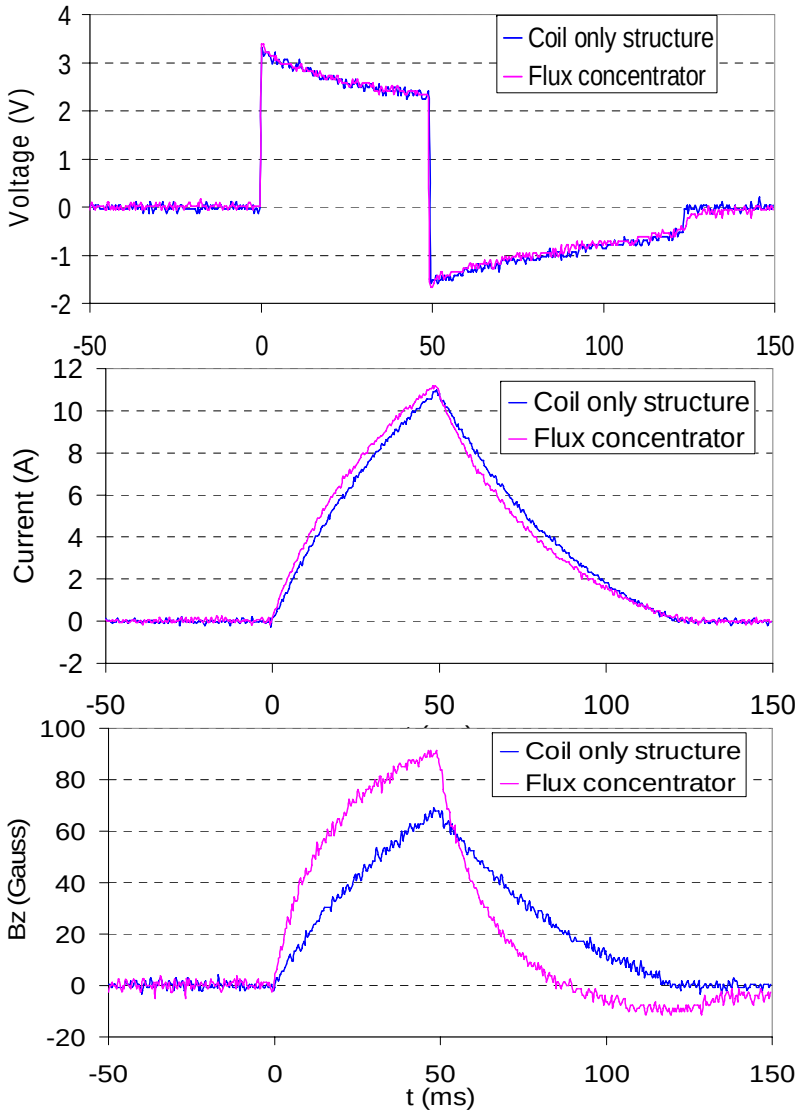

Measurements at Low Temperature

To improve field enhancement, the entire flux concentrator with coil is placed in a cooler.

A reservoir is made on top of aluminum core. Liquid nitrogen flow into the reservoir to cool the whole structure.

Temperature measurement

- Temperature was measured using RTD sensor (100 Ω Platinum).
- Temperature is measured at two locations, one is on aluminum core, another on the coil.
  - Coil, 170ºK,
  - Aluminum core, 77ºK.

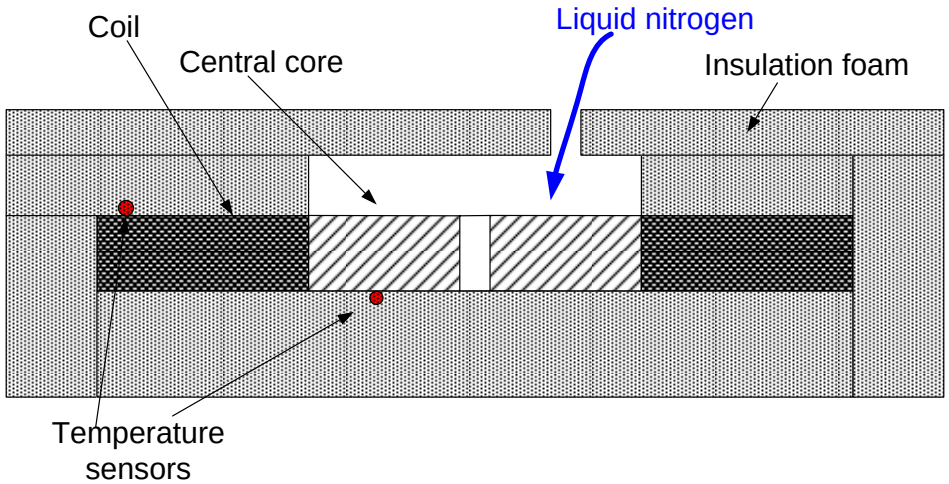

Comparisons of Transient Responses (Before and After Cooling)

With the same excitation voltage, coil current enhances about 20%, and magnetic field increases more than 50% after cooling by liquid nitrogen.

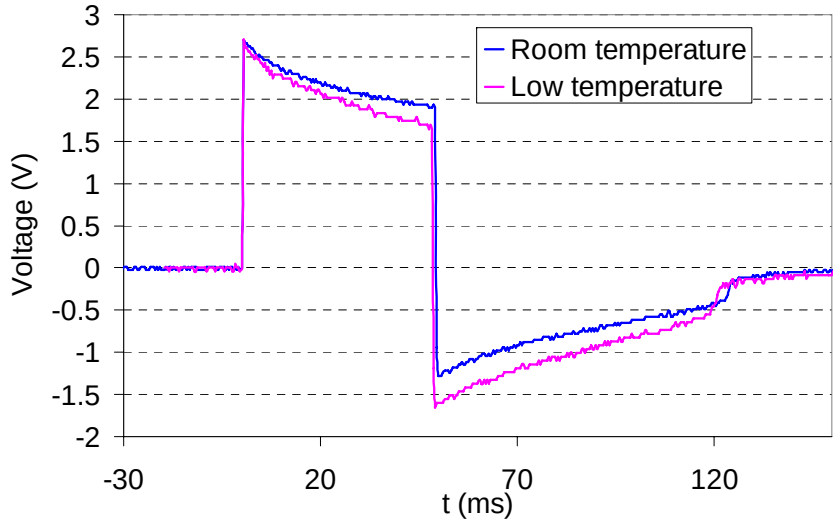

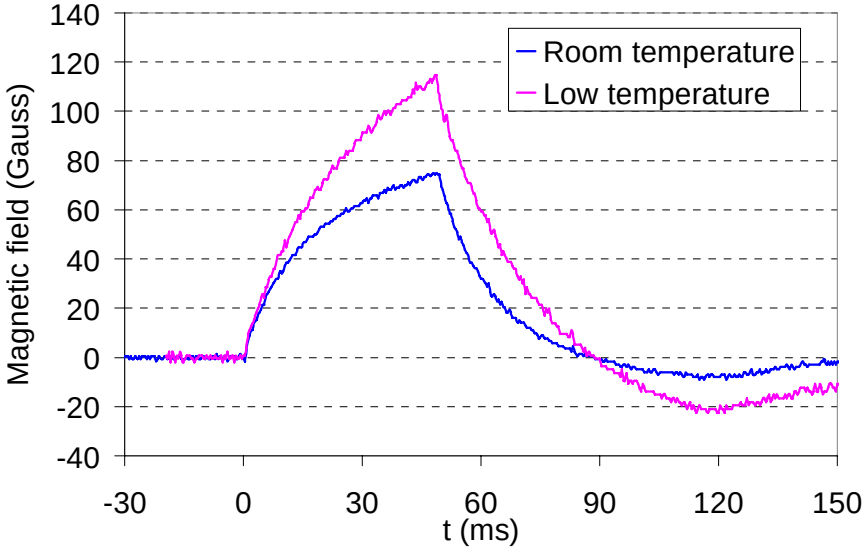

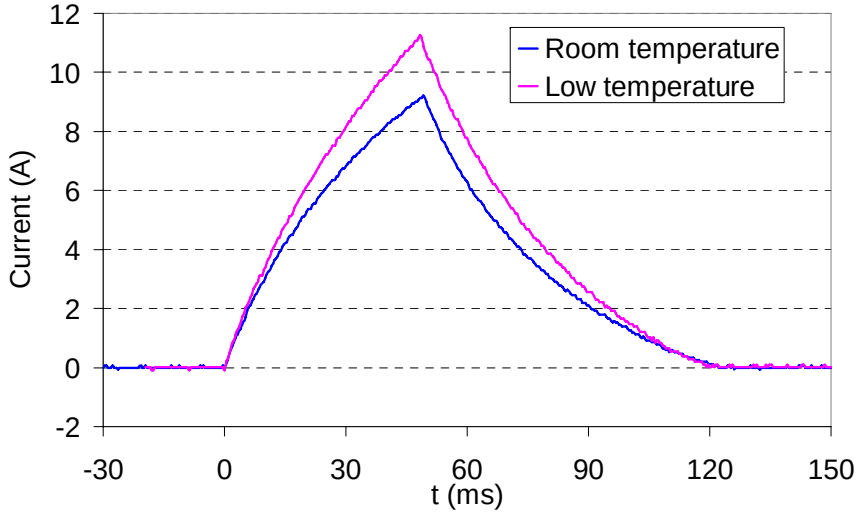

Comparison of Transient Magnetic Field -- Flux Concentrator

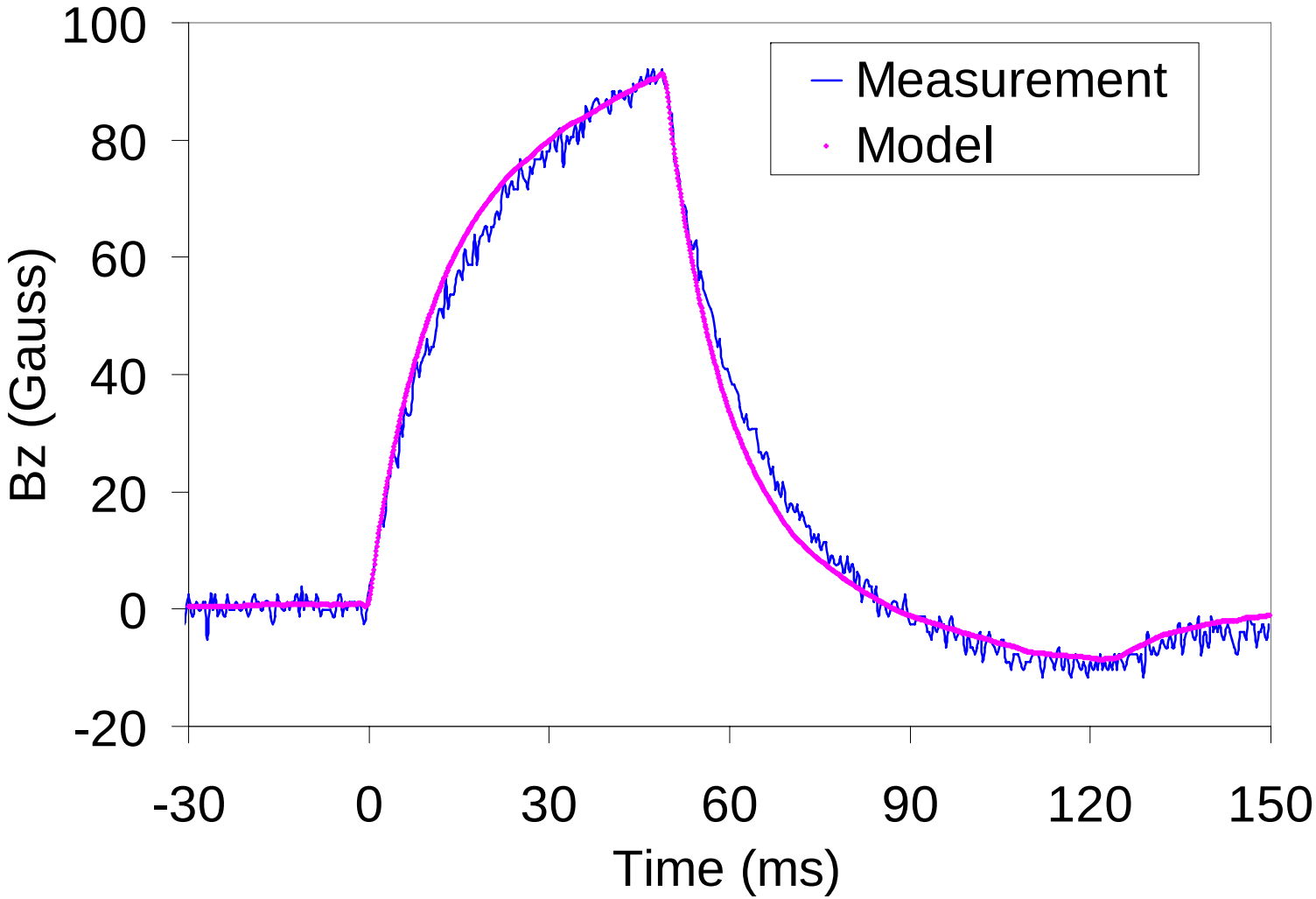

ILC OMD Design

Design requirements:

- Peak on-axis magnetic field > 5 Tesla,
- Pulse width = 5ms,
- Pulse repetition rate = 5 Hz.

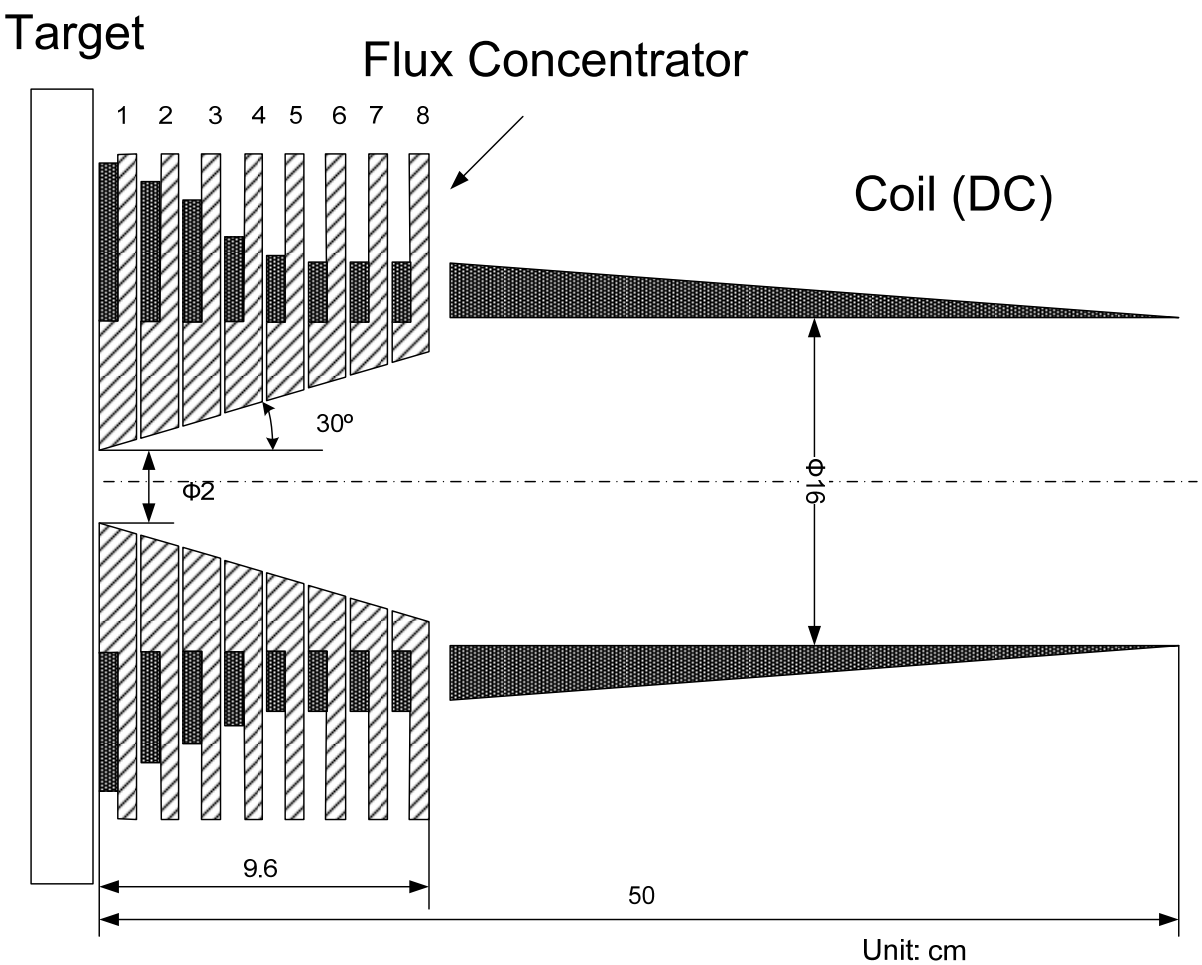

Transient Responses and Field Profile

Transient responses
(1cm from the target)

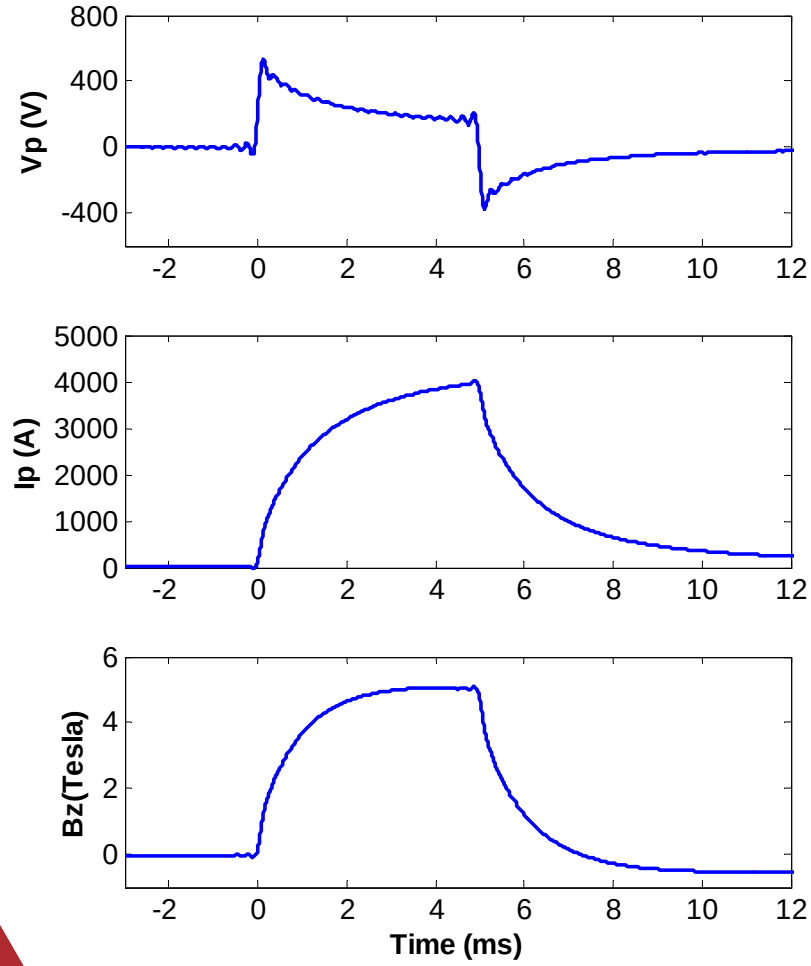

Distribution of on-axis magnetic field
(4ms after pulse is applied.)

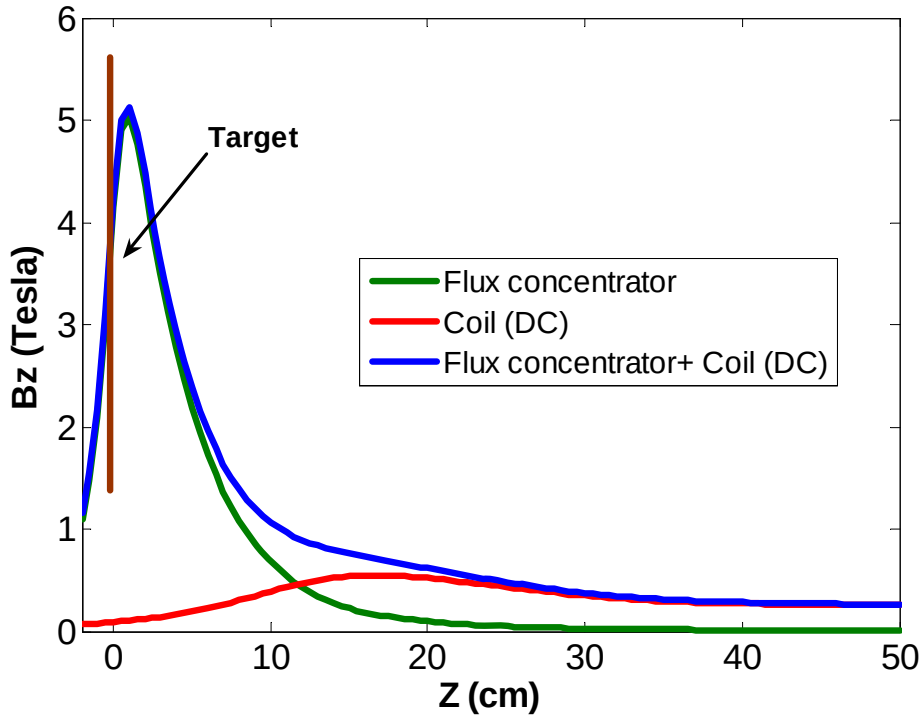

Typical Operating Parameters

Parameters of flux concentrator

Work mode	pulse
Operation Temperature	77°K
Pulse width	5 ms
Repetition rate	5 Hz
Number of turns of primary coil	78
Peak power input to magnet	1.3 MW
Average power input	22 KW
Peak current	4000 A
Peak on-axis Magnetic field	5.1 Tesla
Wire size of primary coil	0.475 × 0.381 cm²

Parameters of DC coil

Work mode	DC
Operation Temperature	293°K
Power input	81 KW
Current	926 A
Total Number of turns	135
Wire size of coil	0.475 × 0.381 cm²

Summary

- We developed a circuit model based on frequency domain analysis to calculate transient response of a flux concentrator and its field profile.

- To validate the model, a prototype structure was designed and built. Transient responses and on-axis field profiles for two configurations, coil-only, and flux concentrator, are measured. The calculated results from the model showed good agreement with the measured data. We also cooled the flux concentrator using liquid nitrogen. About 50% field enhancement was realized compared to the data at room temperature.

- ILC OMD based on pulsed flux concentrator was designed using the equivalent circuit model. The designed OMD has a peak magnetic field equal to 5 Tesla. The peak power input to flux concentrator is about 1.3MW, while the average power around 22KW.