Remote Handling of Nuclear Materials

Jim Grudzinski

Nuclear Engineering Division

Argonne National Laboratory

A U.S. Department of Energy laboratory managed by The University of Chicago

Examples of remote Handling Experience

- Basic design principles
- Examples of ANL experience
  - Fuel loading and recycling in Nuclear Reactors (EBR-II)
  - Hot cells on site at ANL
    - *Glove boxes for lower radiation*
    - *Remote Manipulators for higher level radiation*
  - Irradiated Materials Laboratory (IML)
    - *Small irradiated metal samples are tested for mechanical properties*
    - *Significant technician experience in handling and preparing samples*
  - Robotics
    - *In service inspection devices for examining pressure vessel welds*

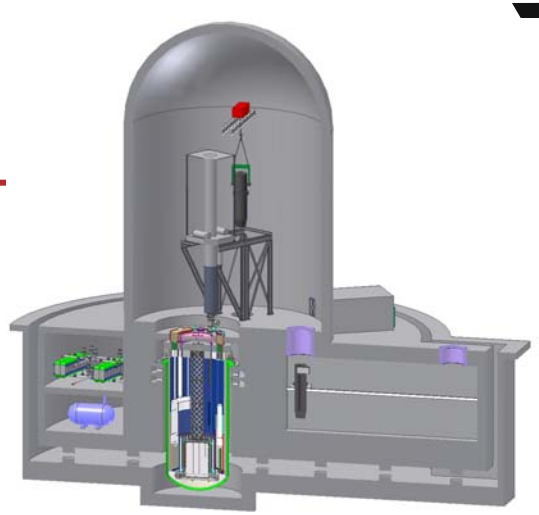

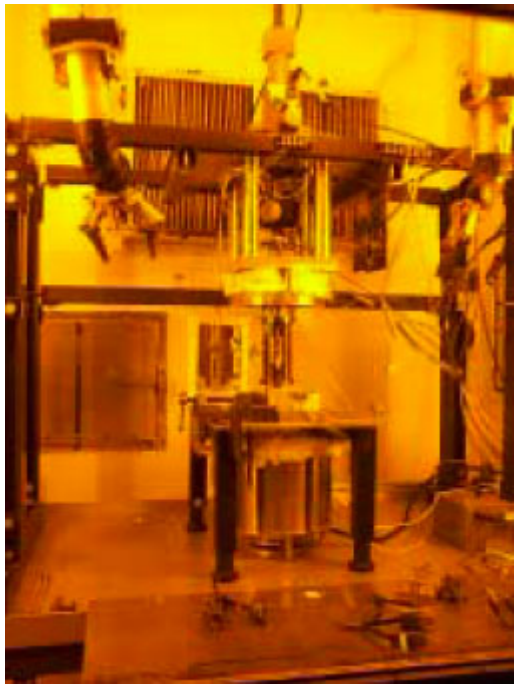

Basic design guideline for remote handling

- “Design Guides for radioactive Material Handling Facilities and Equipment”, ANS provides a standard design reference for components requiring manipulation within a hot cell
- Design details included to allow assembly, maintenance, and removal of components in radioactive environments

Remote Assembly

- Location and fastening means
  - Captive bolts / nuts
  - Locating Pins

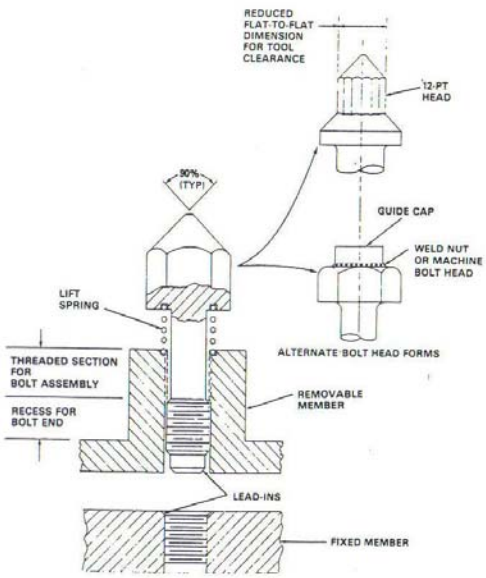

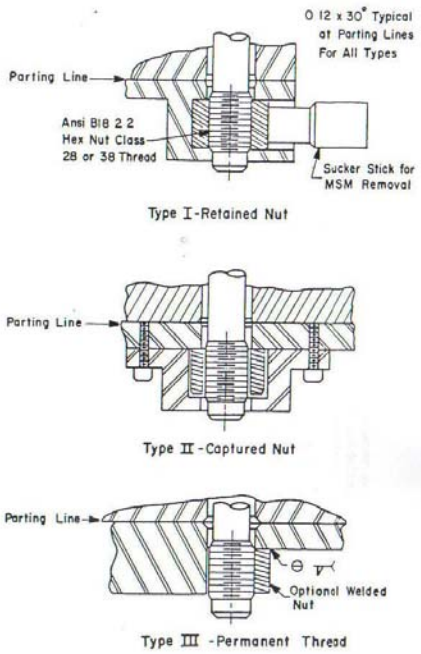

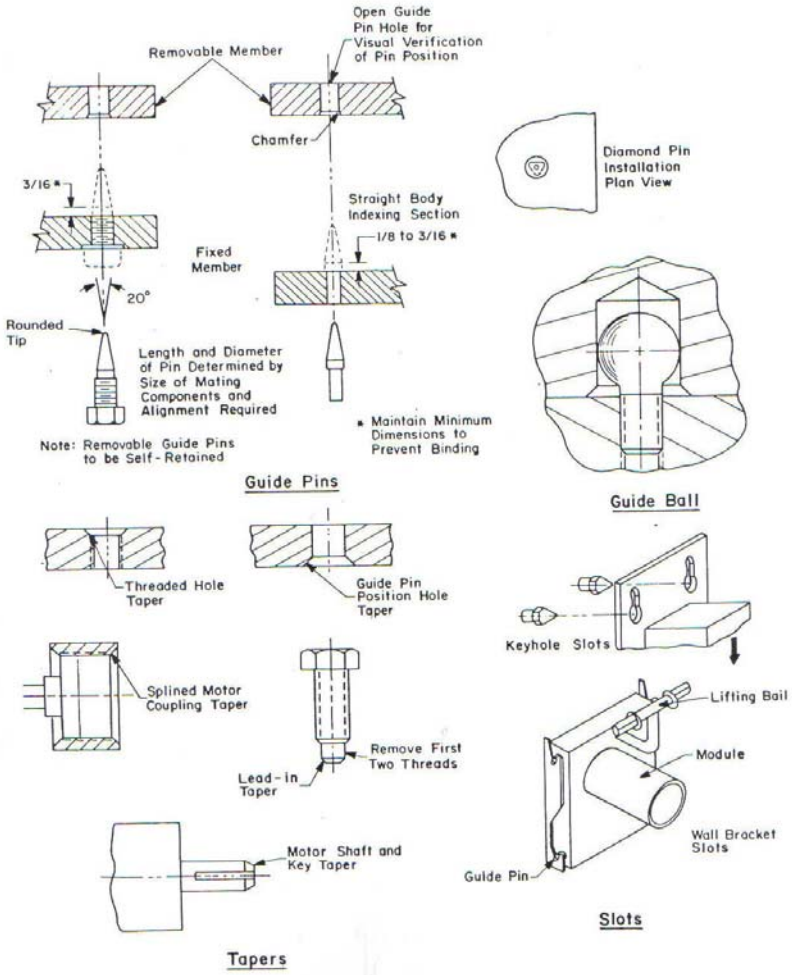

Design for use with tools

- Remote compliant locking and release mechanisms
- Design for use with Master-Slave systems

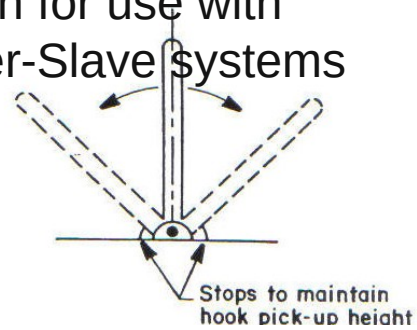

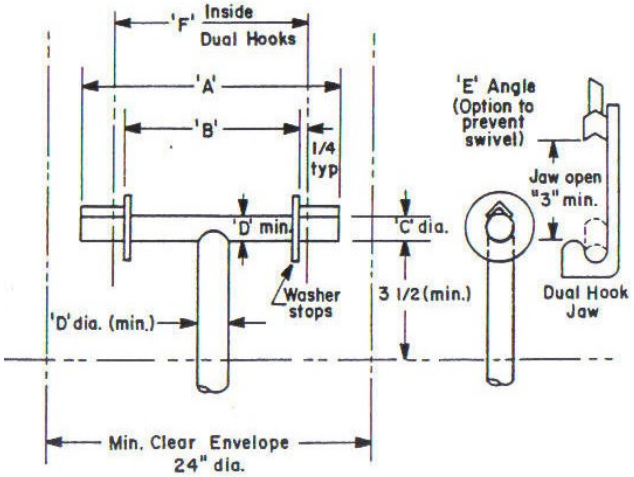

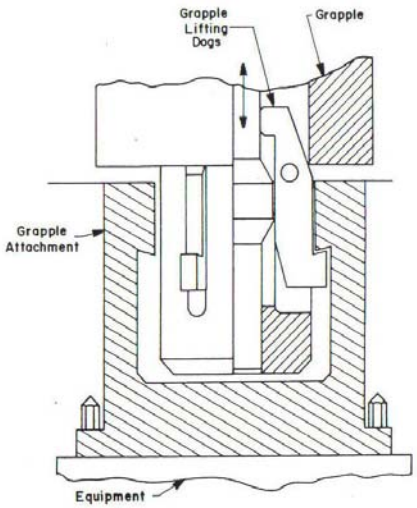

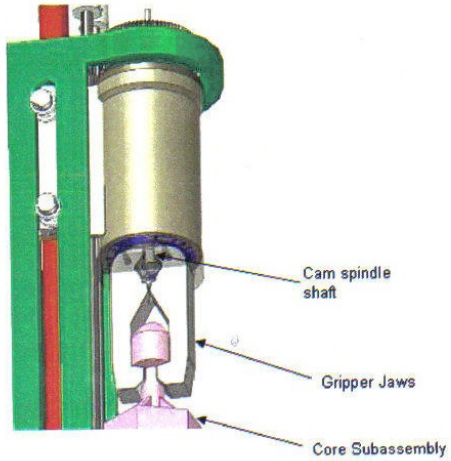

Modified AFR-300

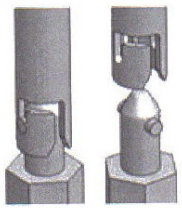

Quarter turn female

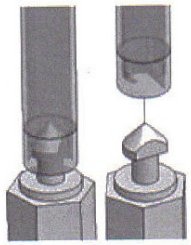

Quarter turn male

Design for component replacement/maintenance

- Changing a motor in hot cell

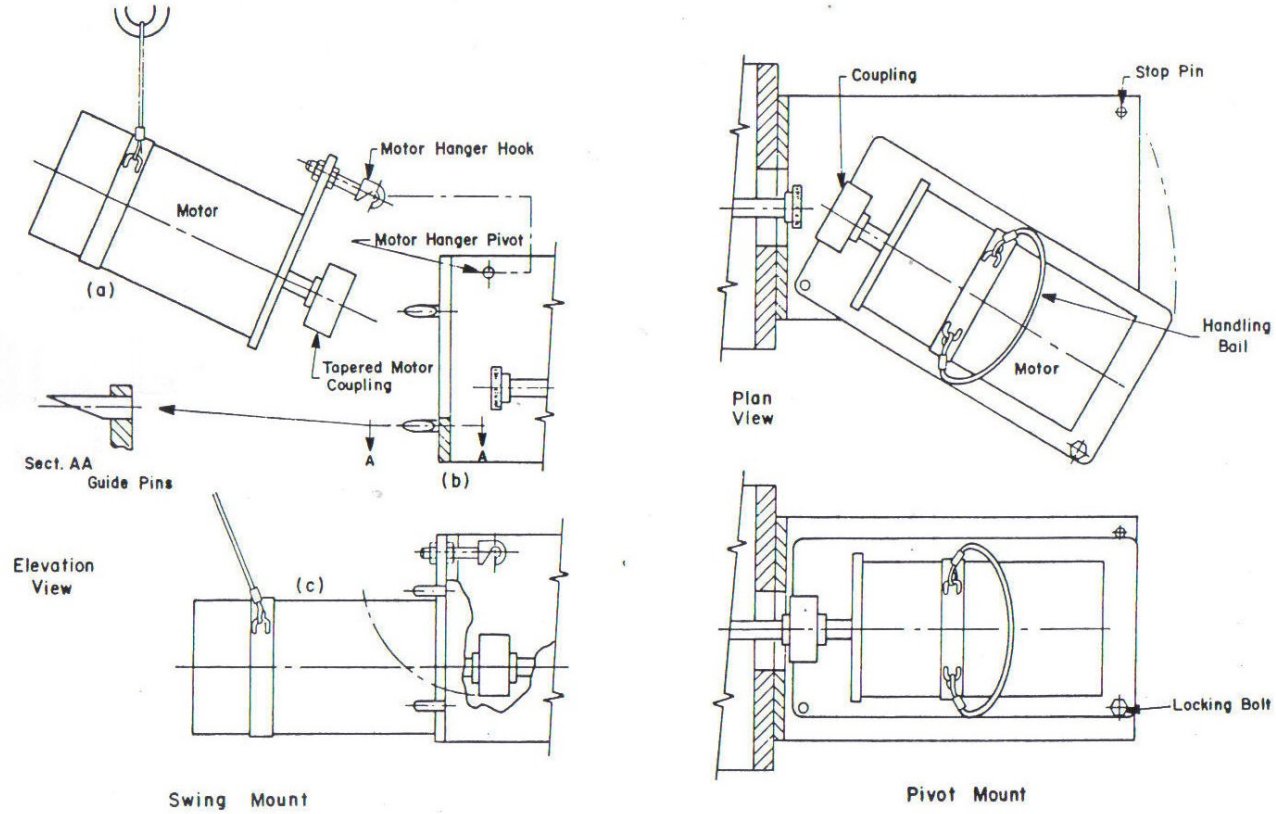

Fuel Handling in a reactor - Overview

- High temperatures- liquid sodium pool
- Airlock transfer into inert atmosphere
- Casks provide cooling during long term storage

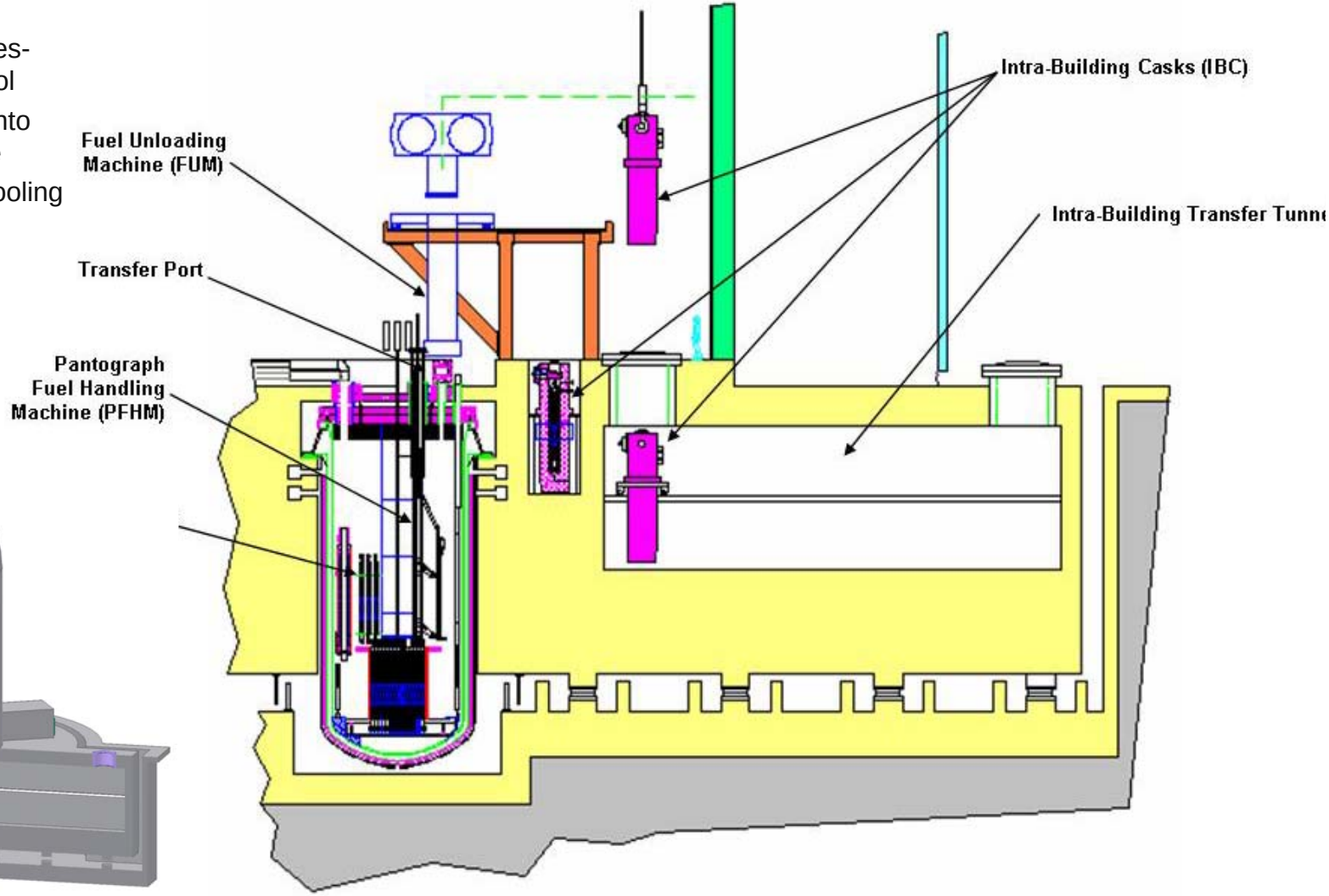

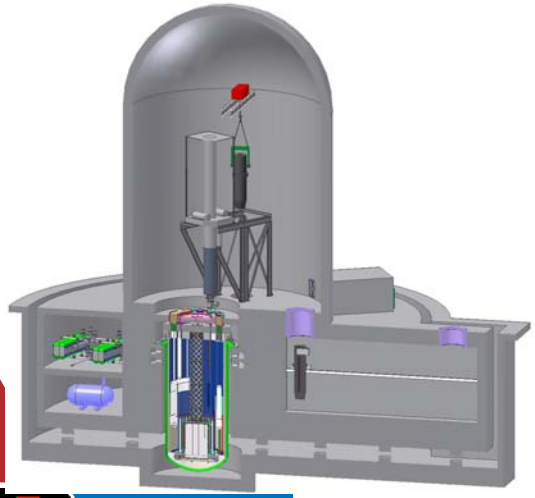

Pantograph Fuel Unloading Machine

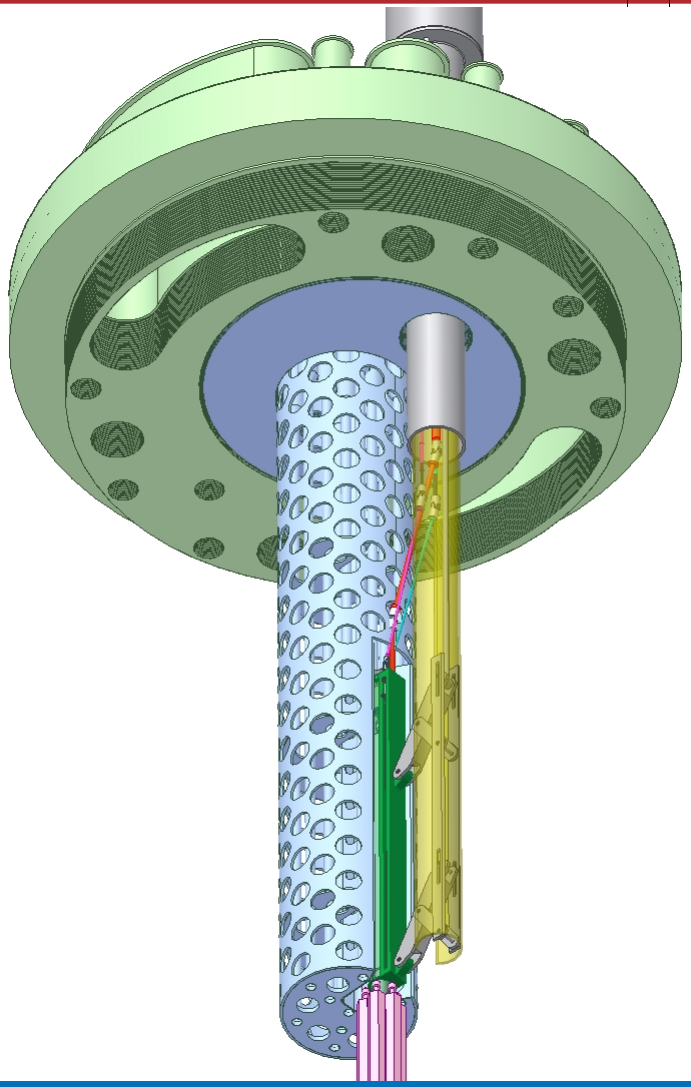

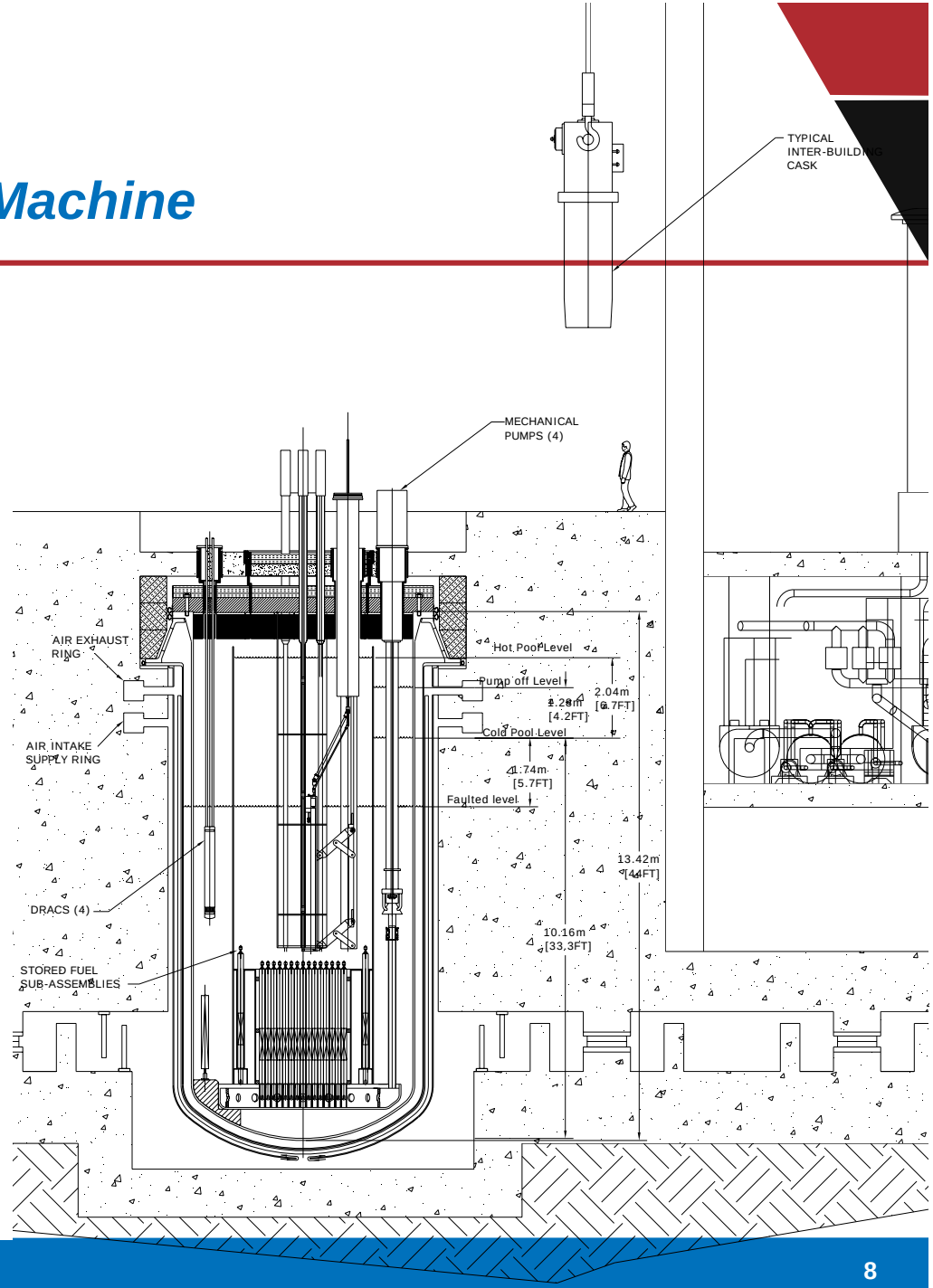

Fuel Condition Facility

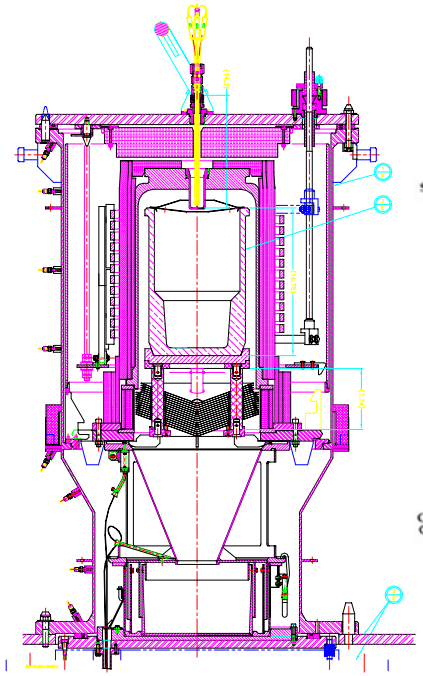

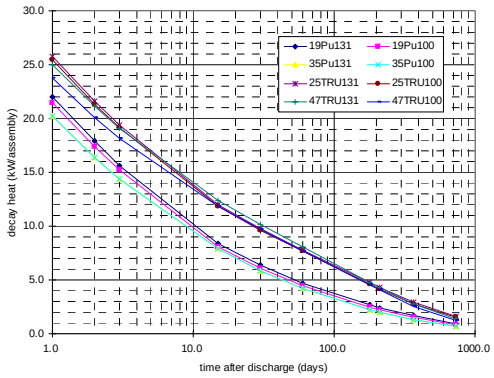

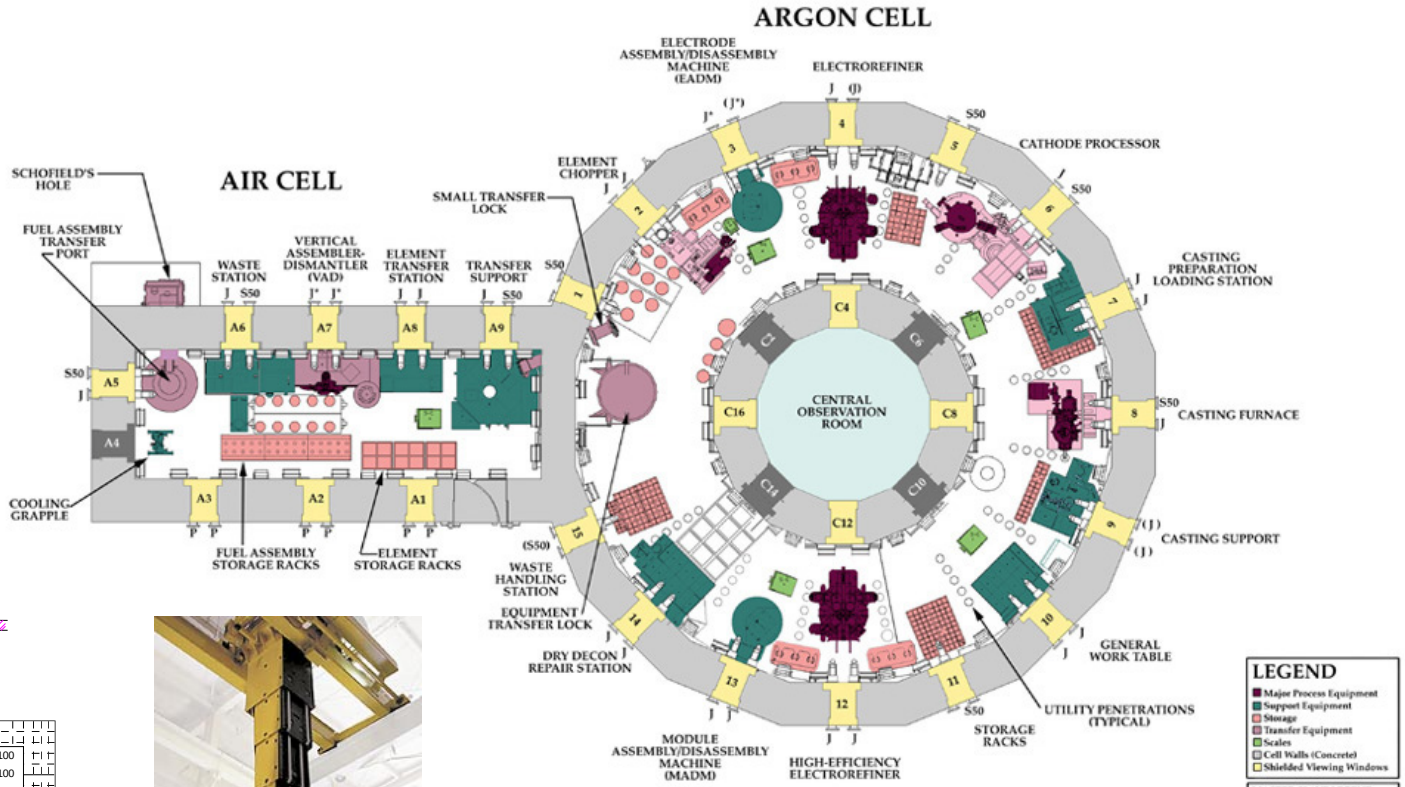

FCF
AIR / ARGON CELL LAYOUT

Robotic systems/ Imaging

Robotics Technology

- Remote Control
- Motion Planning
- Sensing / Monitoring

Inservice Inspection

- **Sensing**
- **Navigation**
- **High Temperature/Radiation use**

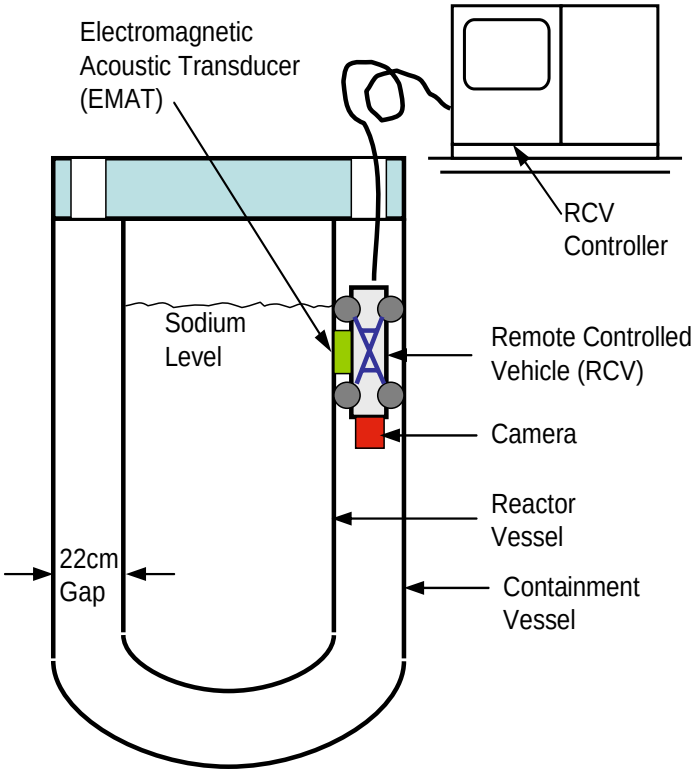

Conceptual design of MTS at LANL

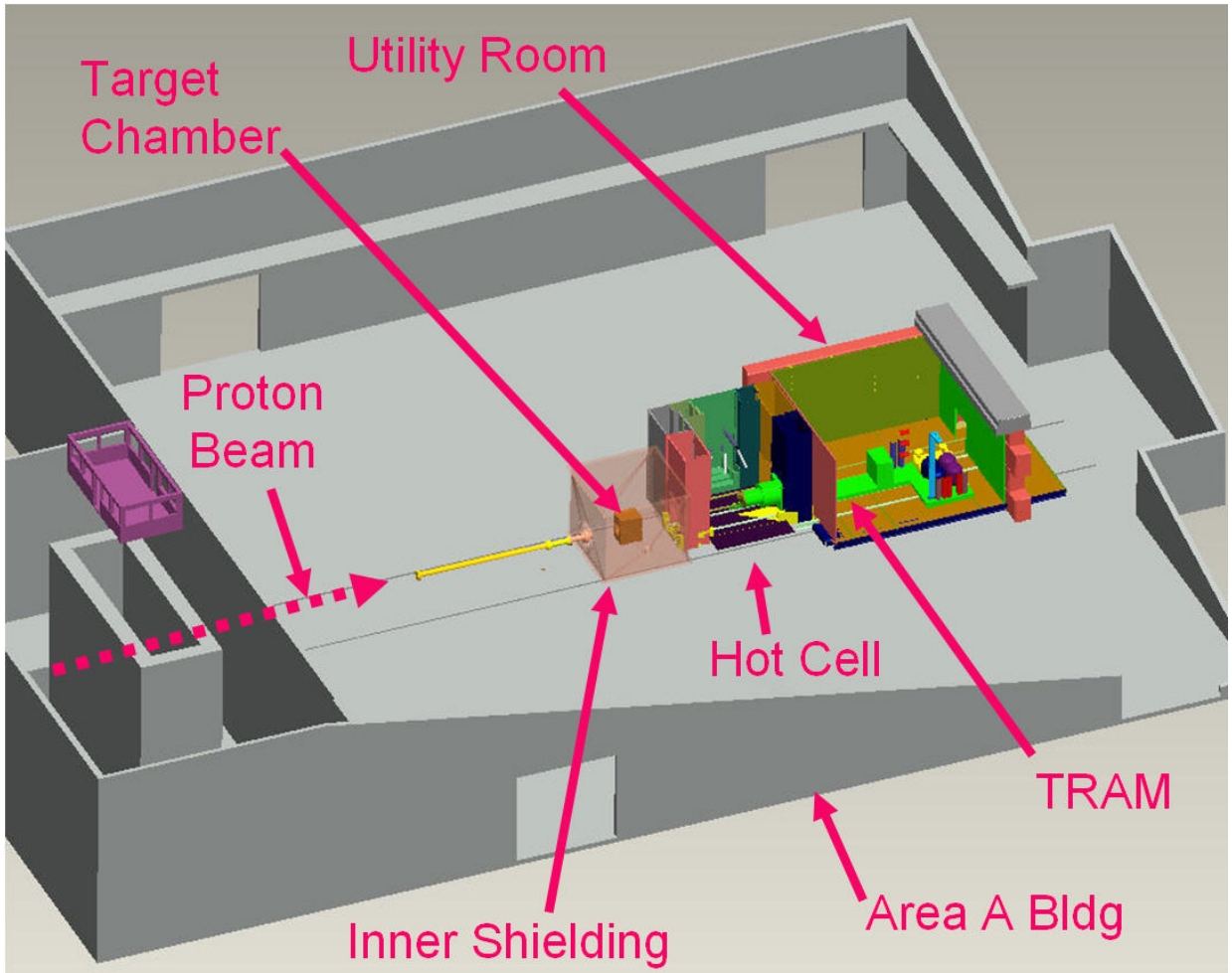

Concept of Hot Cell with removable walls

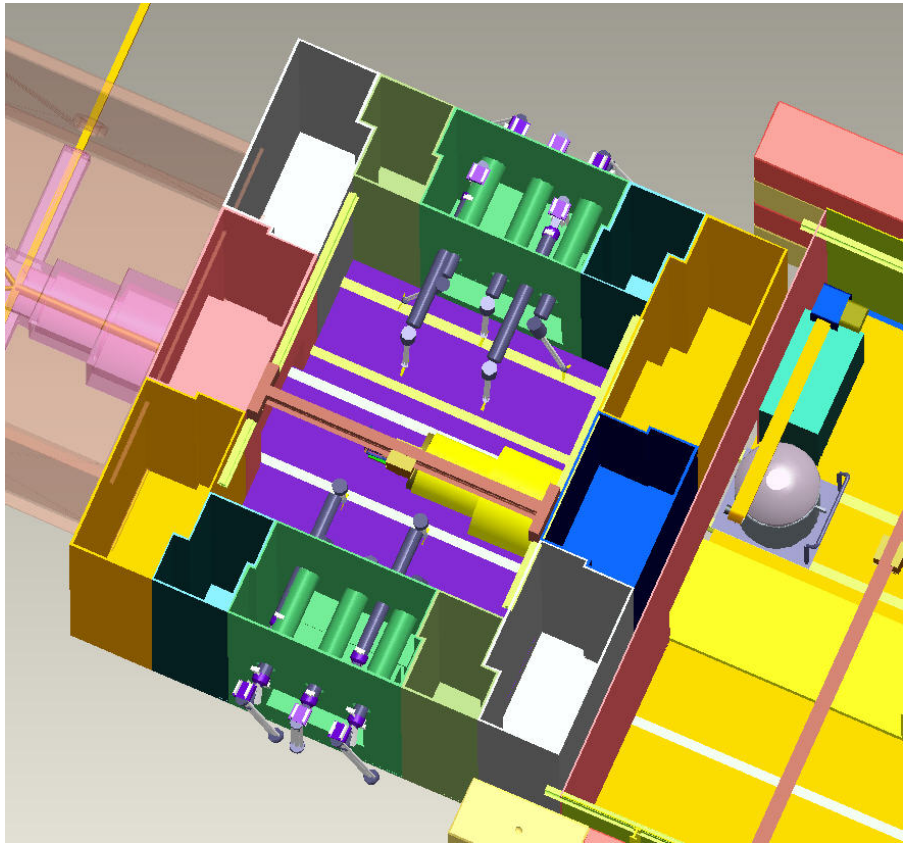

- Remote service cell for target exchanges. Grade-level cask shuttle carries components in/out of service cell. Target Chamber is a left.

Target Module

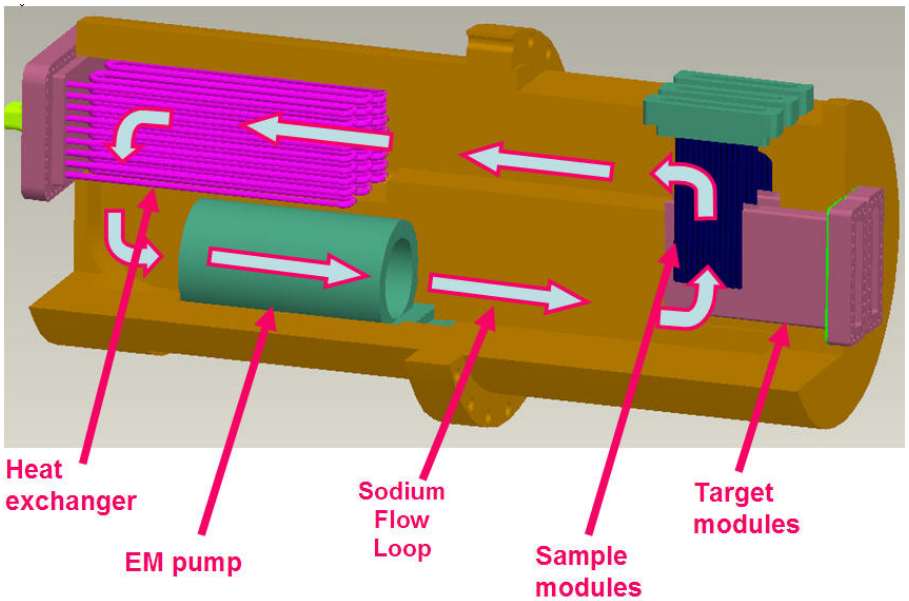

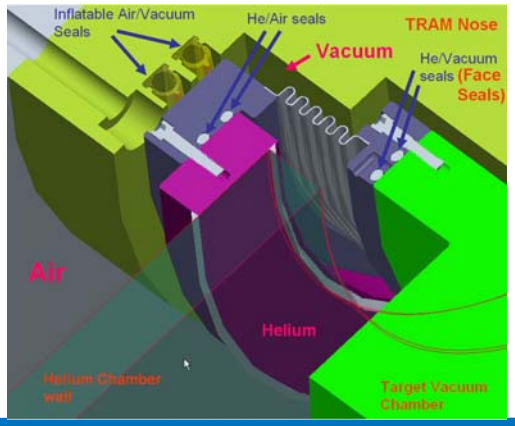

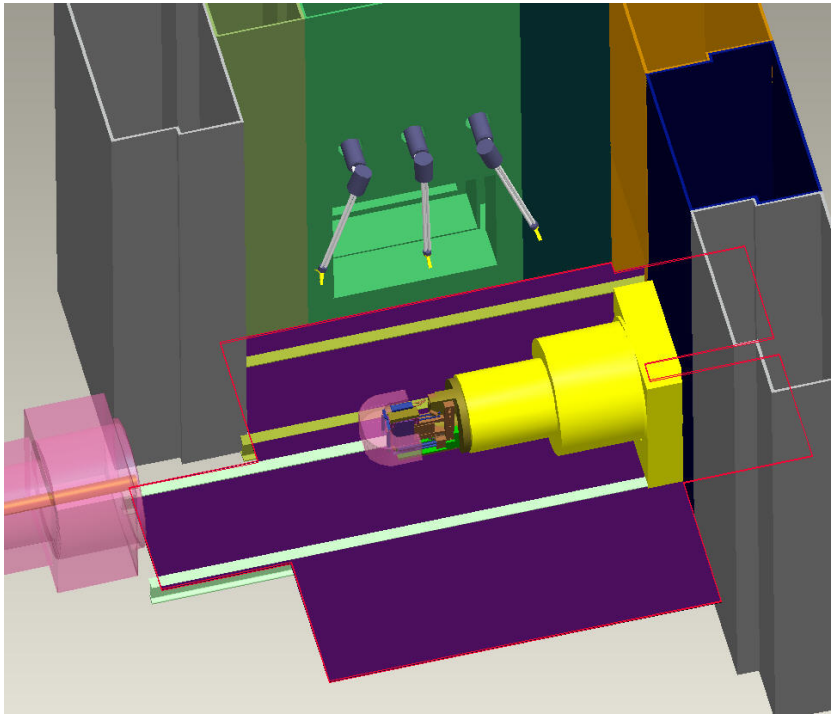

Remotely handled shielding

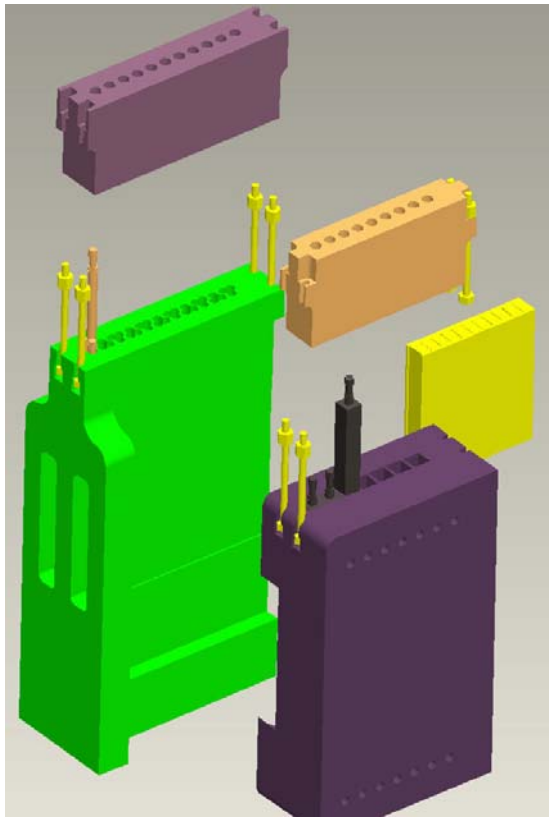

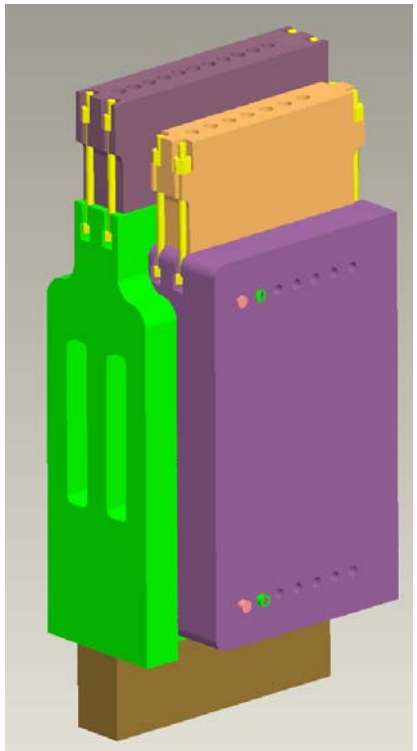

- Composite target module designed for remote service.
- Heavy water coolant.

Summary

- Special design considerations needed for design of components used in radioactive environment
  - Design for maintenance
  - Many details to be considered
- Experience in handling wide range of radioactive materials
  - Various size and weight materials
  - Reactor environments are relatively hostile