Optical Stacking Cavity for ILC Compton e^+ source

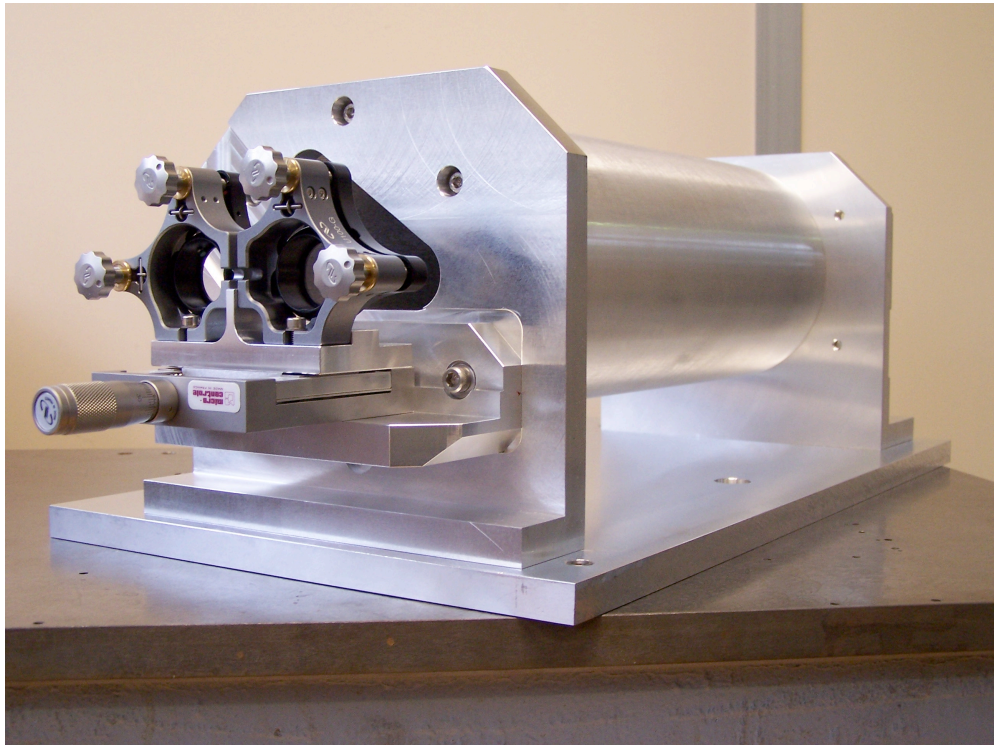

Tsunehiko OMORI (KEK)

on behalf of the French-Asia Compton Optical Cavity Collaboration

e+ source meeting@ANL

18/Sep/2007

French-Asia
Compton Optical Cavity Collaboration

France

F. Zomer (LAL)
A. Variola (LAL)
V. Soskov (LAL)
M. Jacquet (LAL)
A. Vivoli (LAL)
R. Chiche (LAL)
R. Cizeron (LAL)
Y. Fedala (LAL)
D. Jehanno (LAL)

Asia

T. Omori (KEK)
J. Urakawa (KEK)
N. Terumuma (KEK)
M. Kuriki (KEK)
S. Araki (KEK)
T. Takahashi (Hiroshima Univ.)
H. Shimizu (Hiroshima Univ.)
S. Miyoshi (Hiroshima Univ.)
N. Sasao (Kyoto Univ.)
M. Washio (Waseda Univ.)
T. Hirose (Waseda Univ.)
K. Sakaue (Waseda Univ.)
Li XioPing (IHEP)
Pei Guoxi (IHEP)
Jie Gao (IHEP)

Today's Talk

1. Laser Compton e^+ source for ILC.

2. Why Stacking Cavity R/D

3. R/D in Japan

4. R/D in France

5. World-wide collaboration

6. Summary

Ring Base Compton (an example)

Re-use Concept

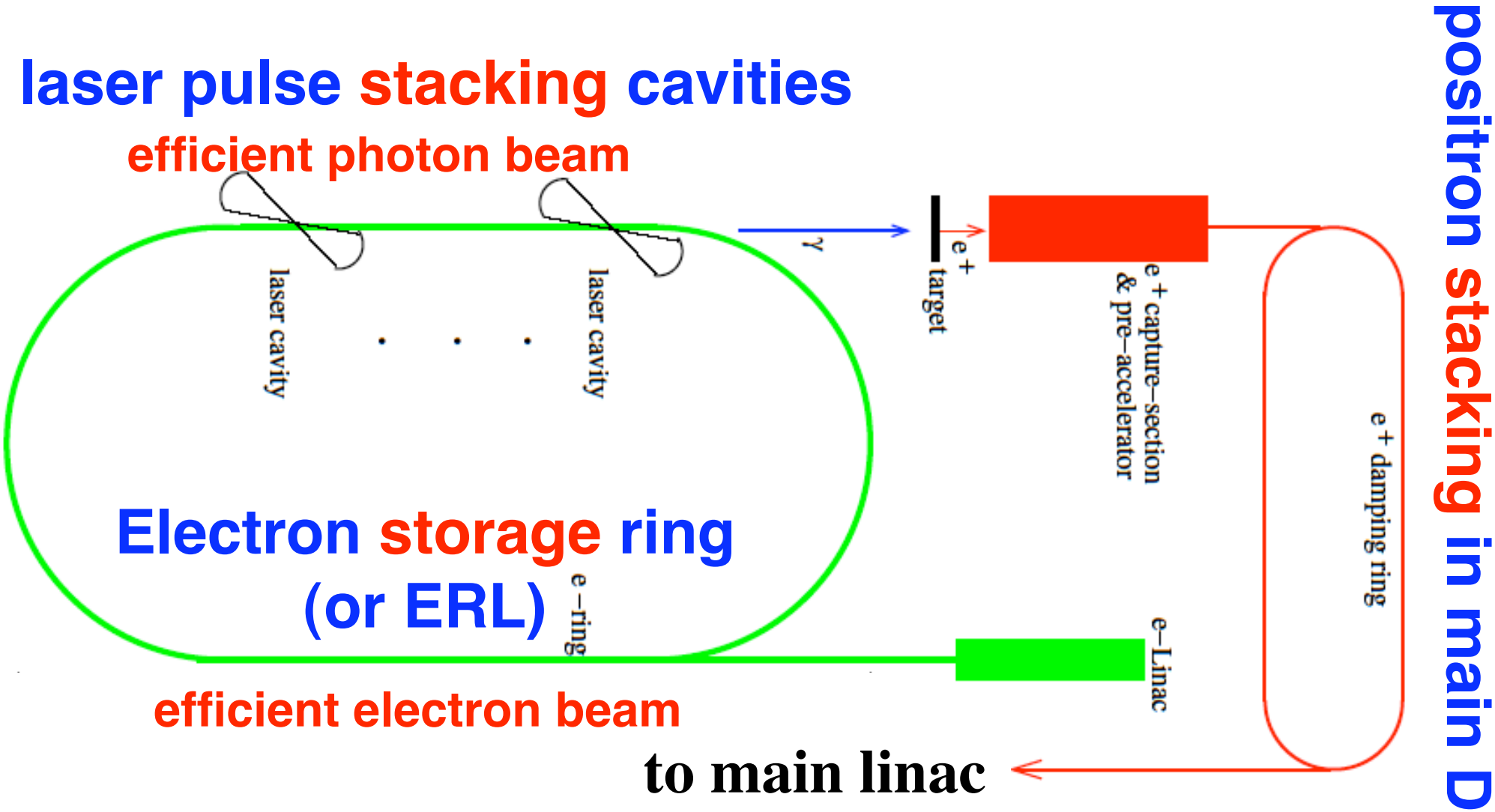

laser pulse stacking cavities

efficient photon beam

Electron storage ring
(or ERL)

efficient electron beam

Laser Pulse Stacking Cavity

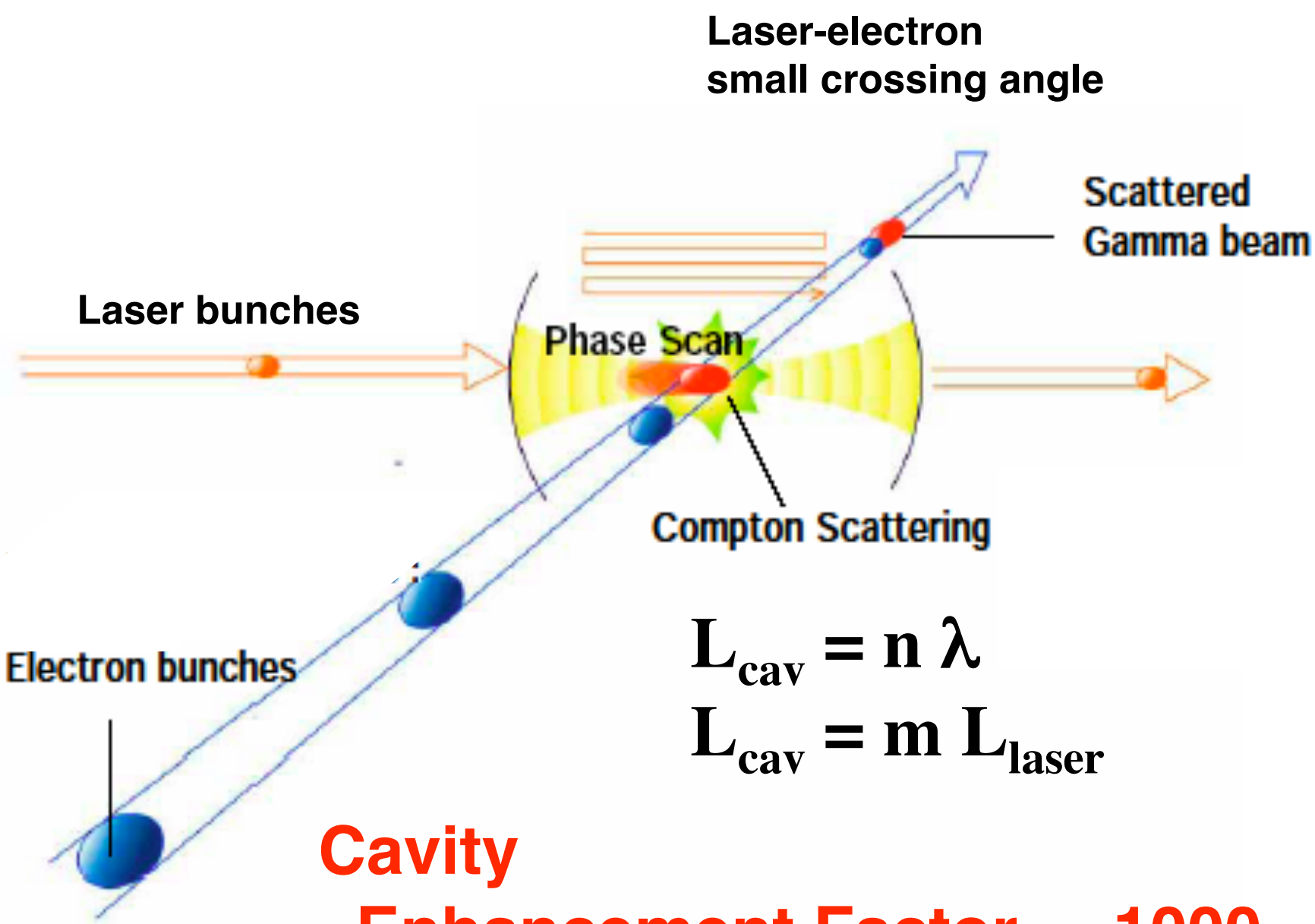

$$L_{cav} = n\,\lambda$$

$$L_{cav} = m\,L_{laser}$$

Cavity
Enhancement Factor = 1000 - 10^5

Why Stacking Cavity R/D?

a) The most uncertain part of the current design.
b) The efficiency of whole system highly depends on the optical cavity design.

- laser spot size
- collision angle
- enhancement factor
- compatibility with e-baem

Simulation alone is not effective in desiging cavity.

We need experimental R/D.

R/D in Japan/China

Moderate Enhancement ~ 1000

Moderate spot size ~ 30 micron

Simple cavity stucture with two mirrors

Get experinence with e^- beam

Experimental R/D in ATF

Hiroshima-Waseda-Kyoto-IHEP-KEK

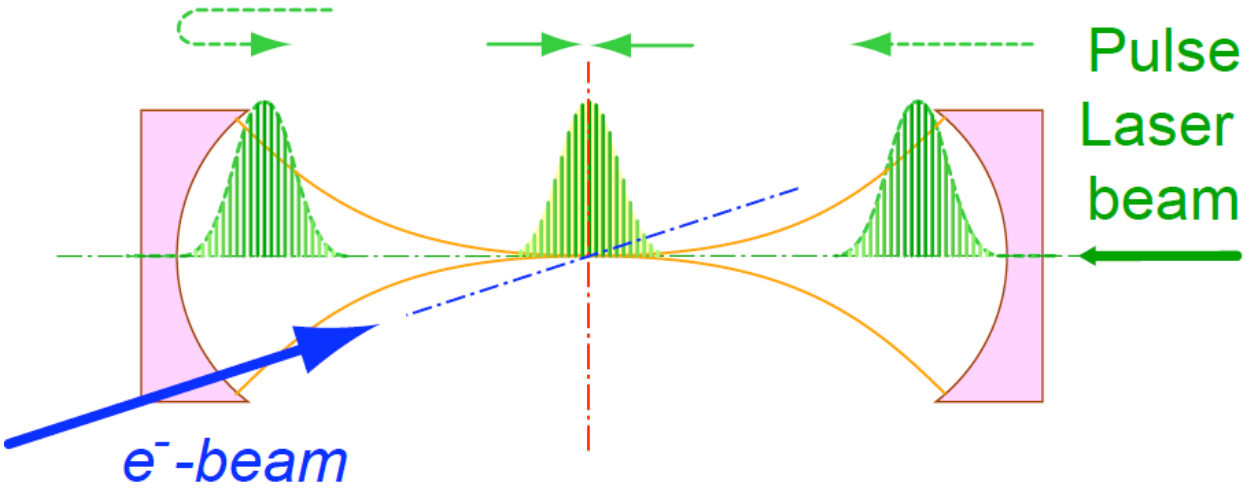

Make a fist prototype 2-mirror cavity

L_{cav} = 420 mm

Put it in ATF ring

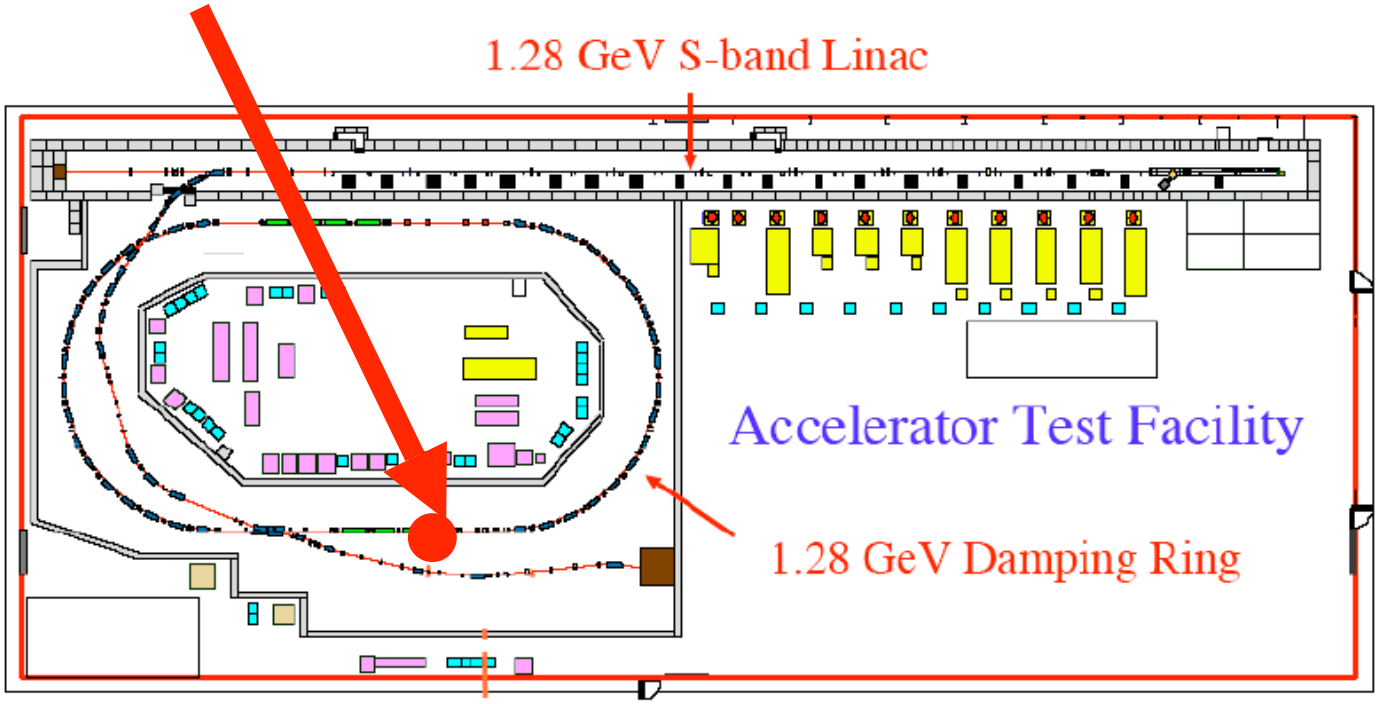

Points of R/D

Achieve <u>both</u>

high enhancement & small spot
(less stabile) & (less stabile)

Points for high enhancement factor

remove/suppress vibration

establish feed-back technology

Points for small spot

$2\rho - L_{cav} \rightarrow +0$

good matching between laser and cavity

all are common in pol. e^+ and laser wire

Points of R/D (continued)

Achieve smaller crossing angle

Number of γ-rays strongly depends on crossing angle

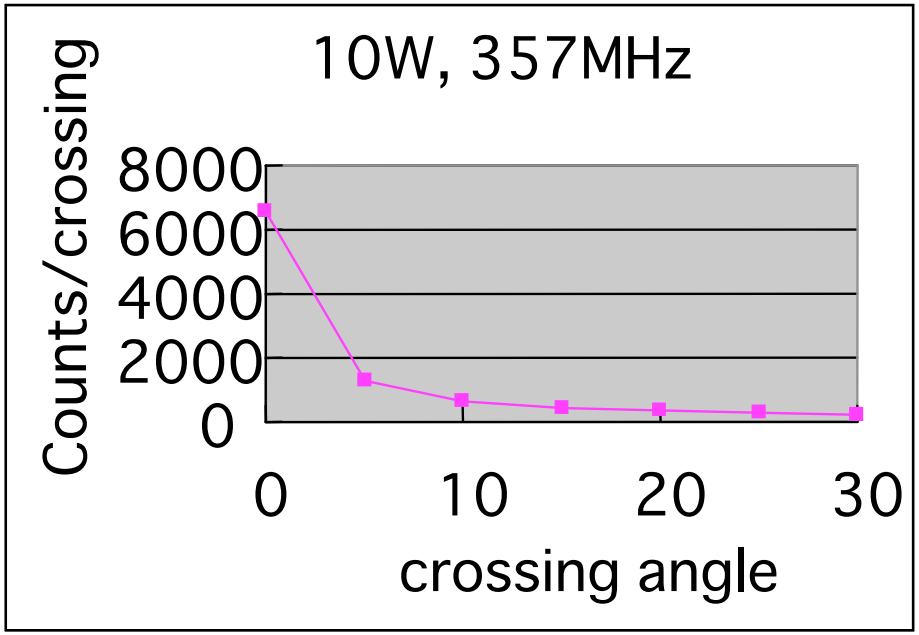

ATF

e^- bunch length = 9 mm (rms)

Ne = 1×10^{10}/bunch

--> Small crossing angle is preferable

--> constraint in chamber design

This in NOT common in pol. e^+ and laser wire

Laser stacking cavity with Two Spherical Mirrors

Choice of R and spot size

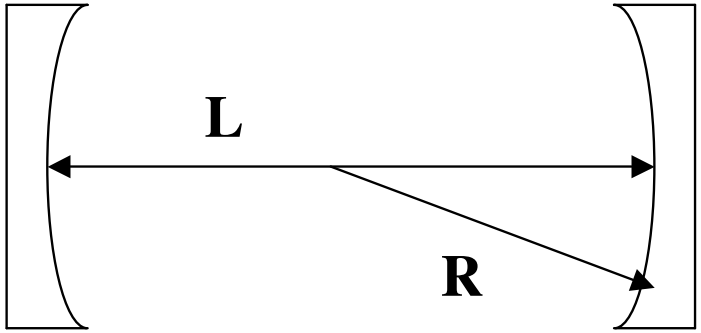

L = 420.00 mm

our choice for 1st prototype

concentric configuration

R + R ~ L

Mirror R (mm)	rms laser spot size (micron)
250	**88**
211	**35**
210.5	**30**
210.1	**20**
210.01	**11**
210.001	**6**

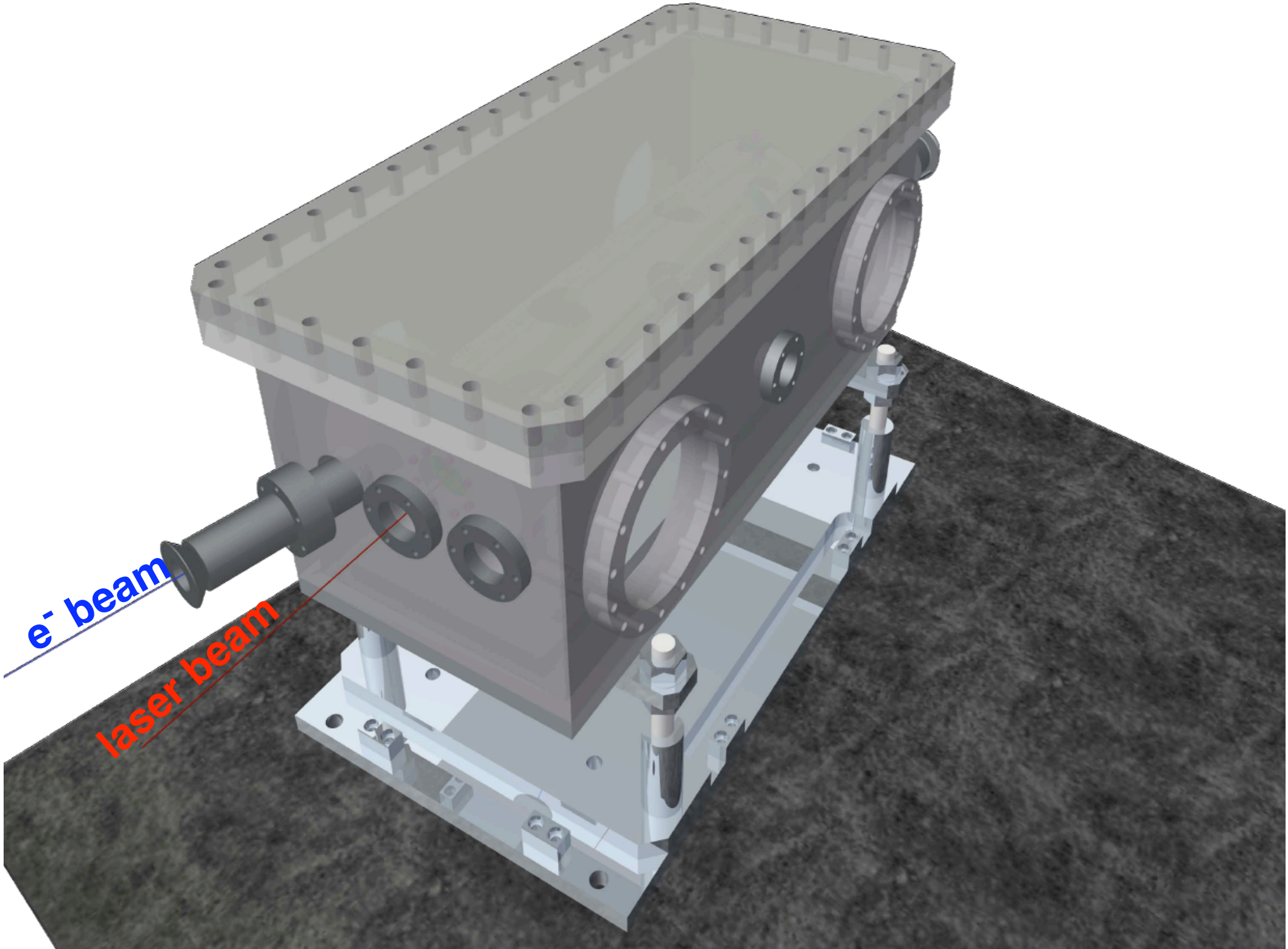
e¯ beam
laser beam

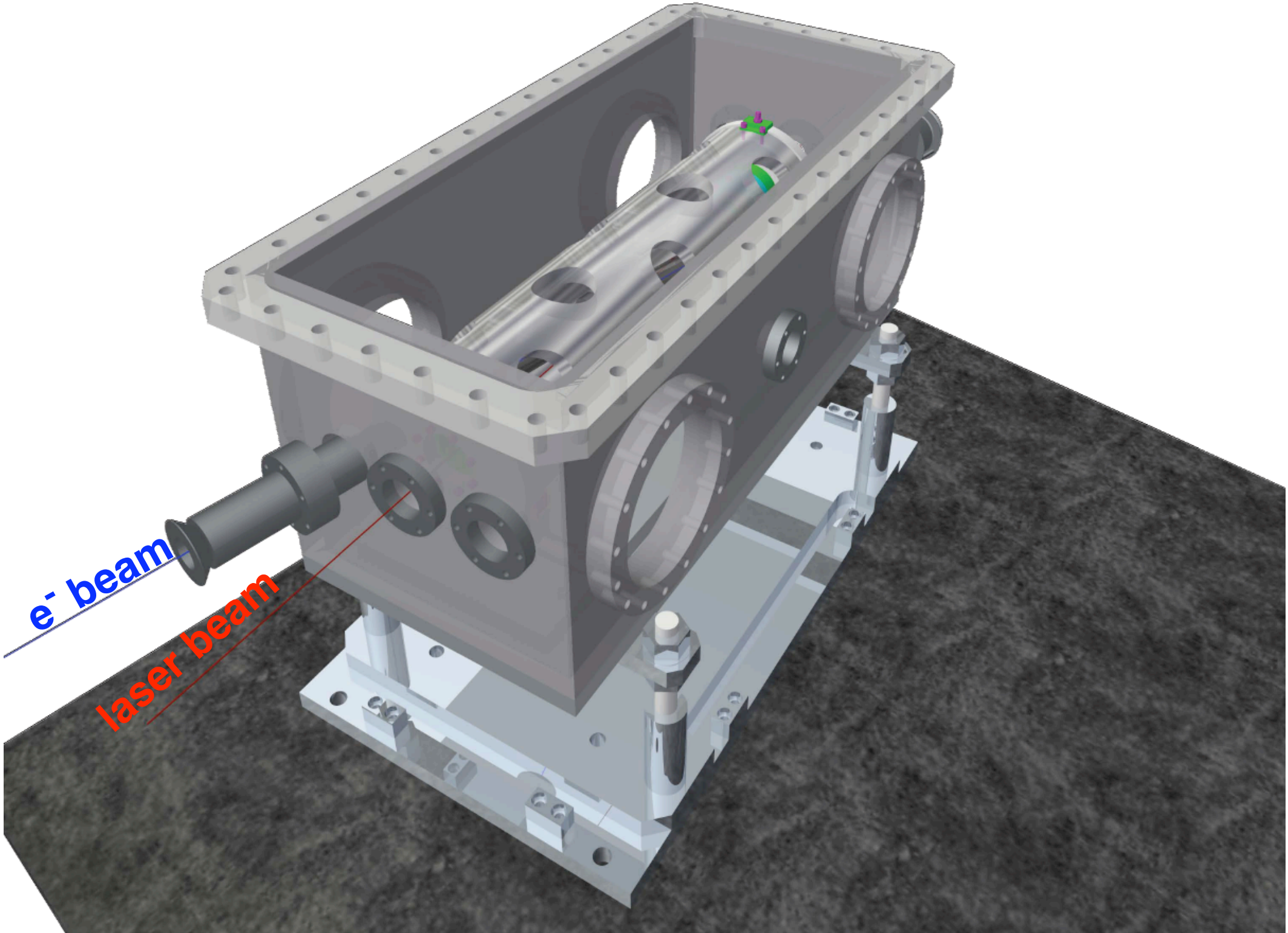
e⁻ beam
laser beam

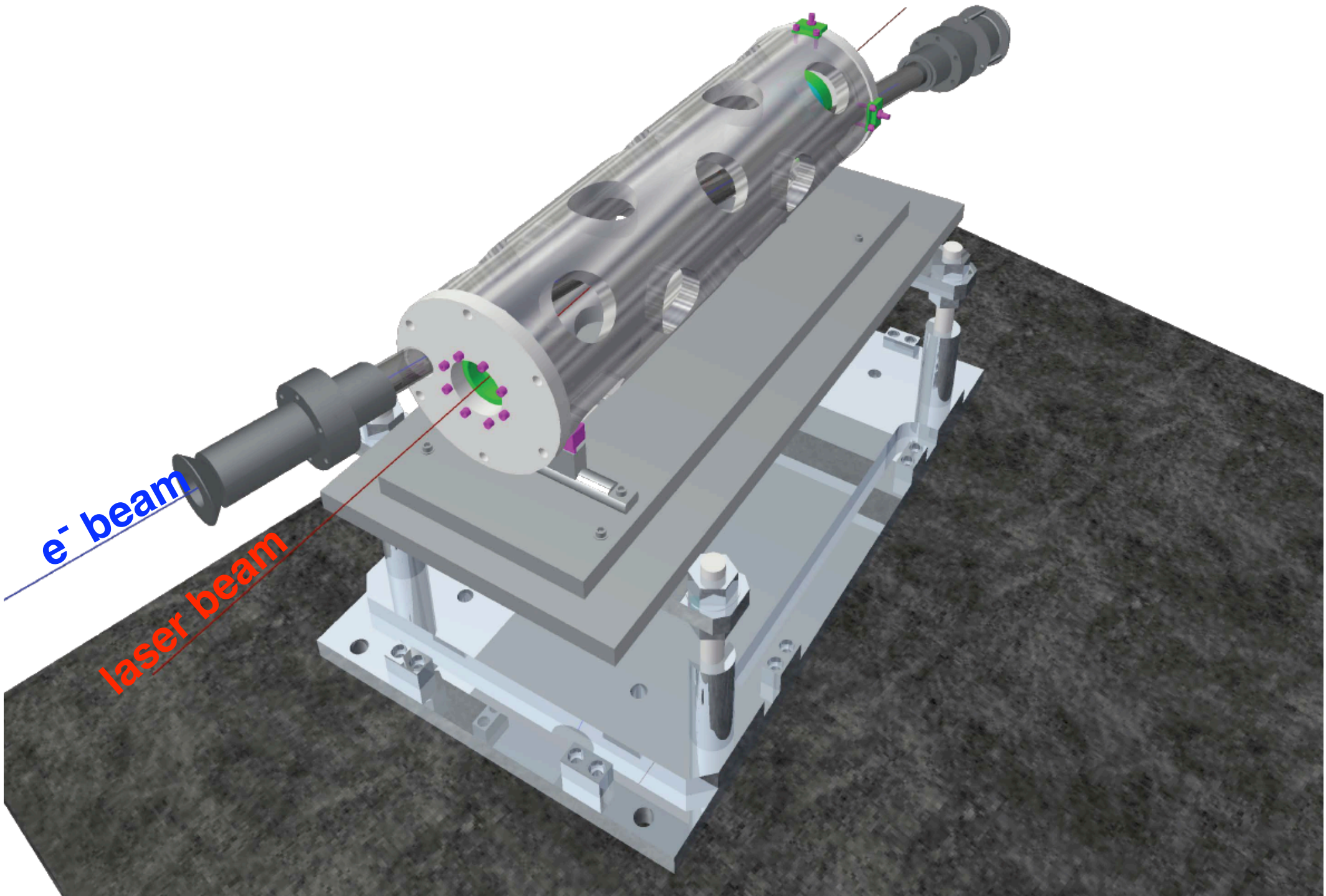
e- beam
laser beam

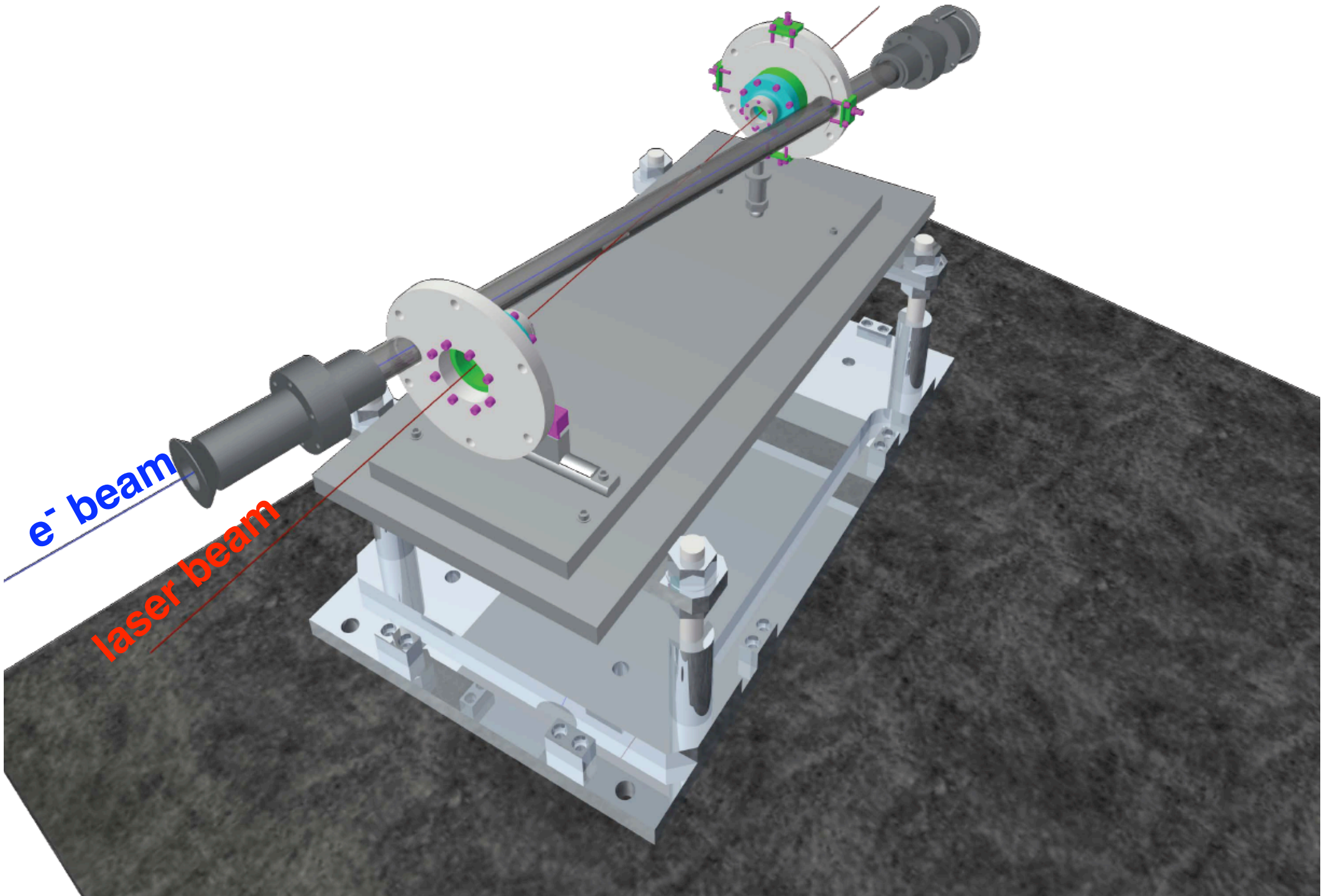
e¯ beam
laser beam

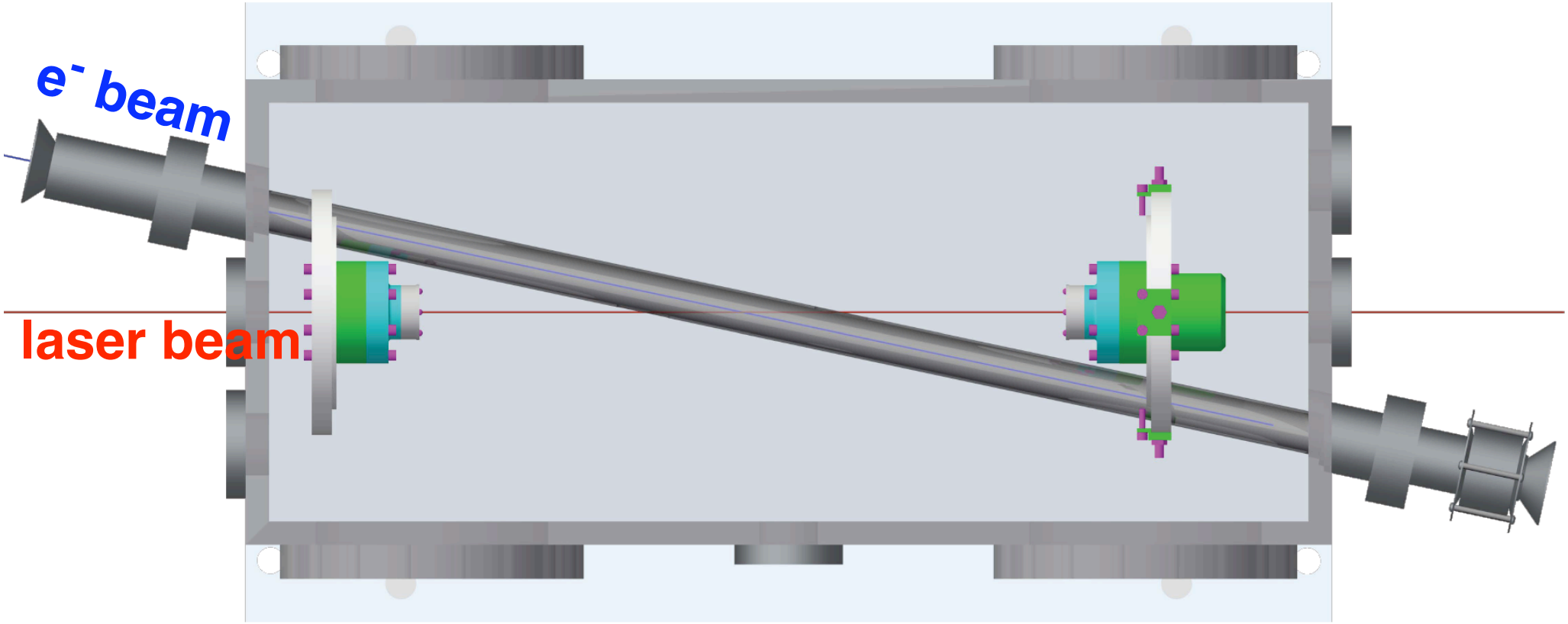
e- beam
laser beam

Optical Cavity

Vacuum chamber

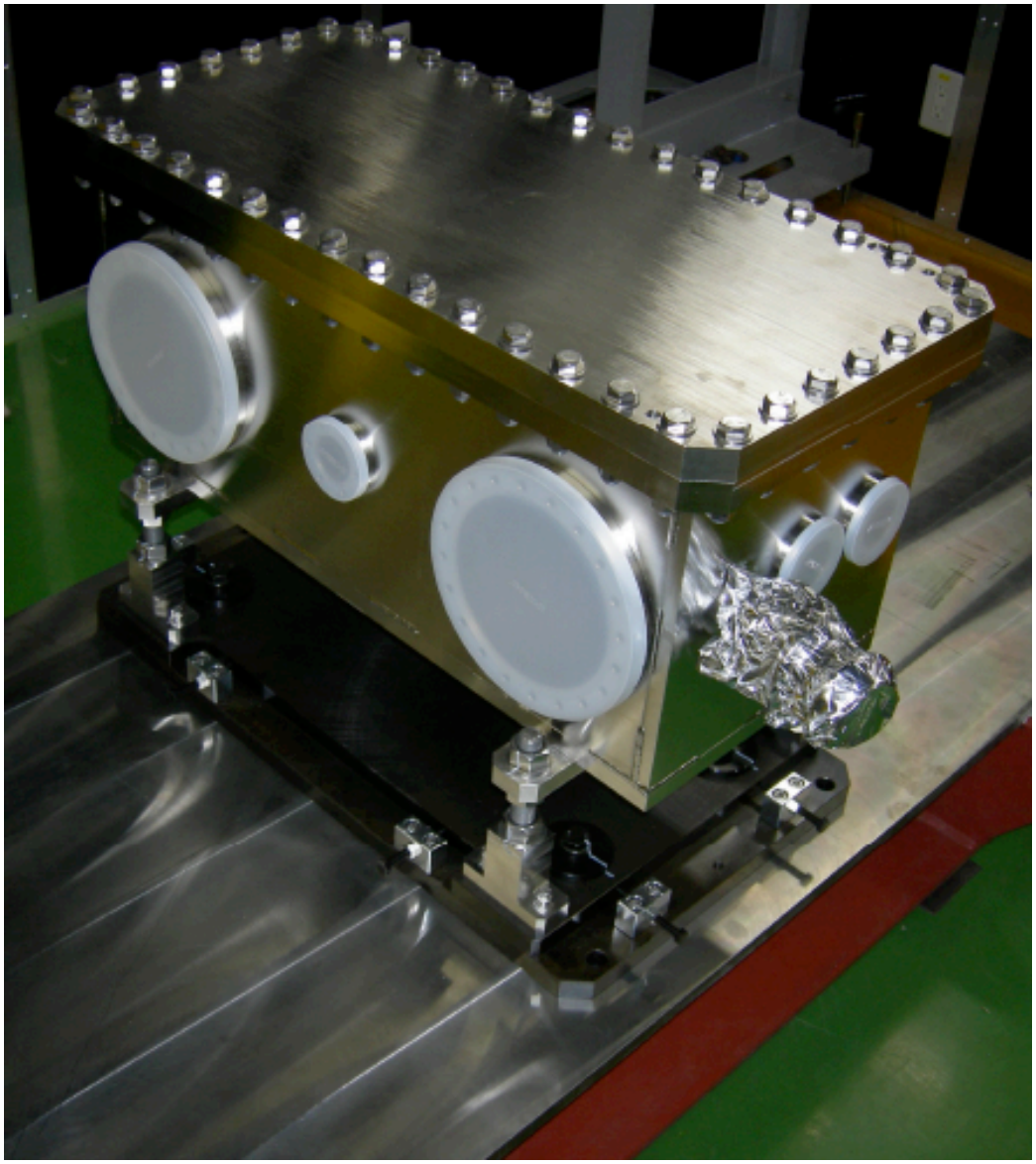

Optical Cavity in Vacuum Chamber

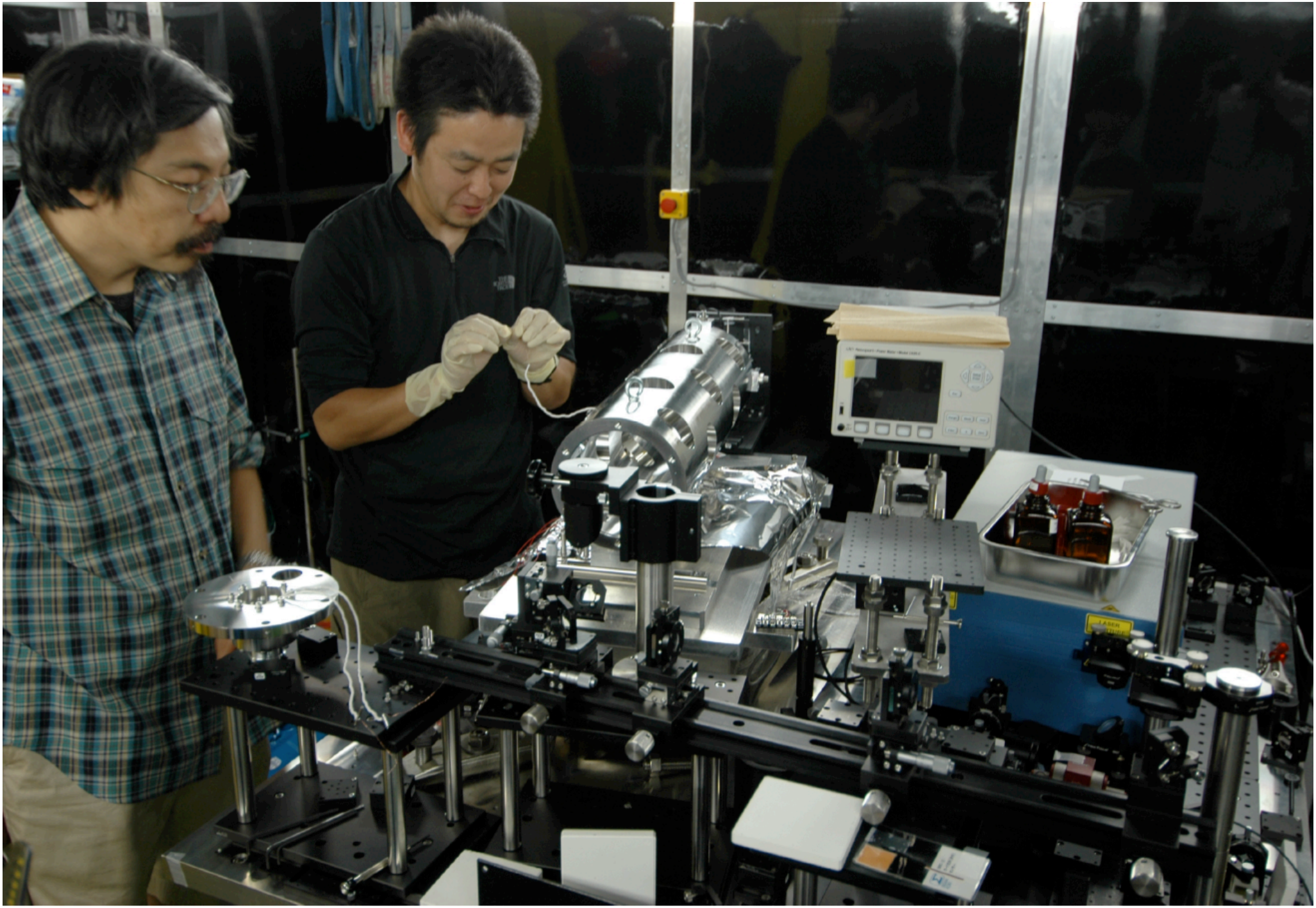

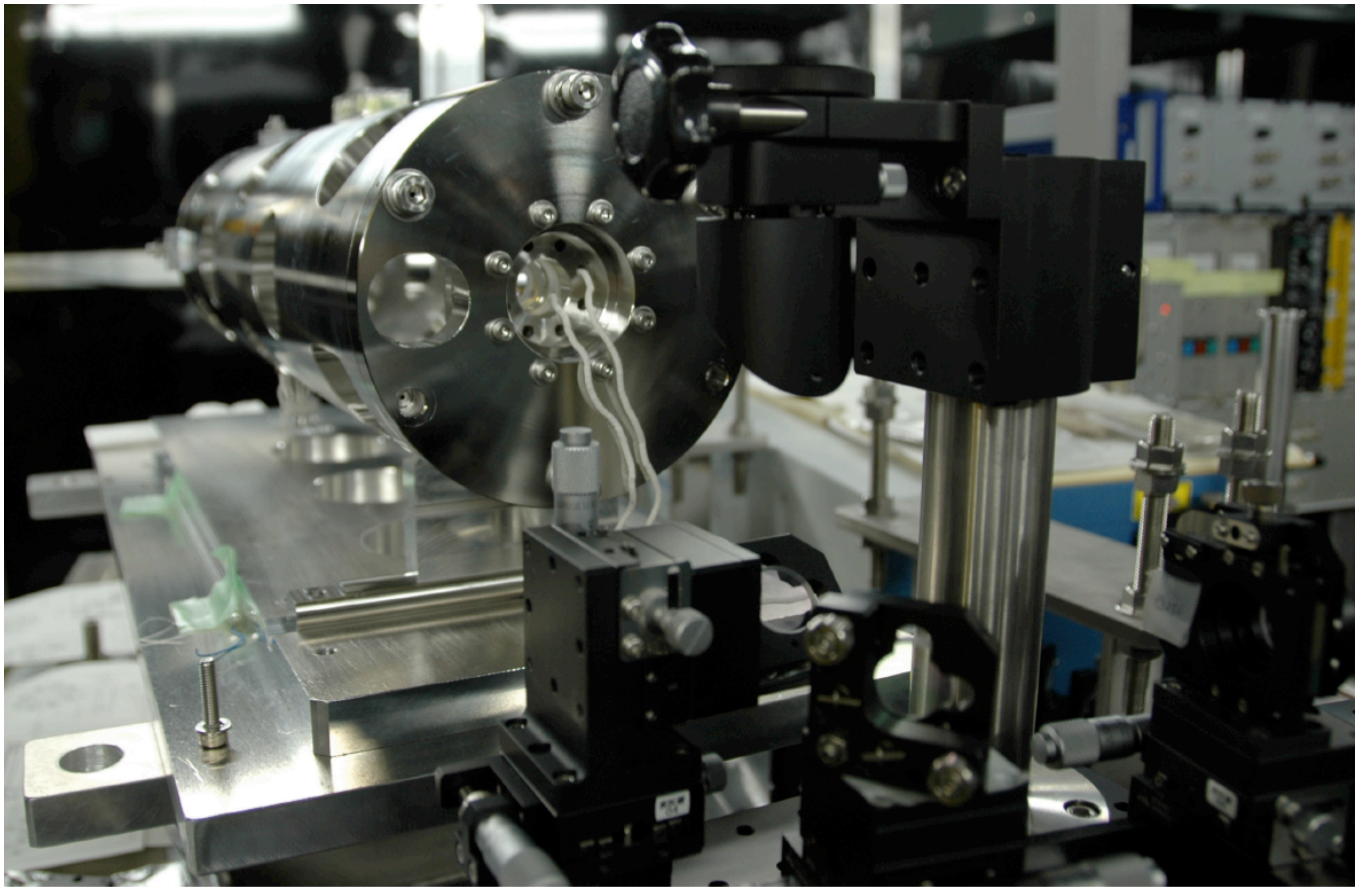

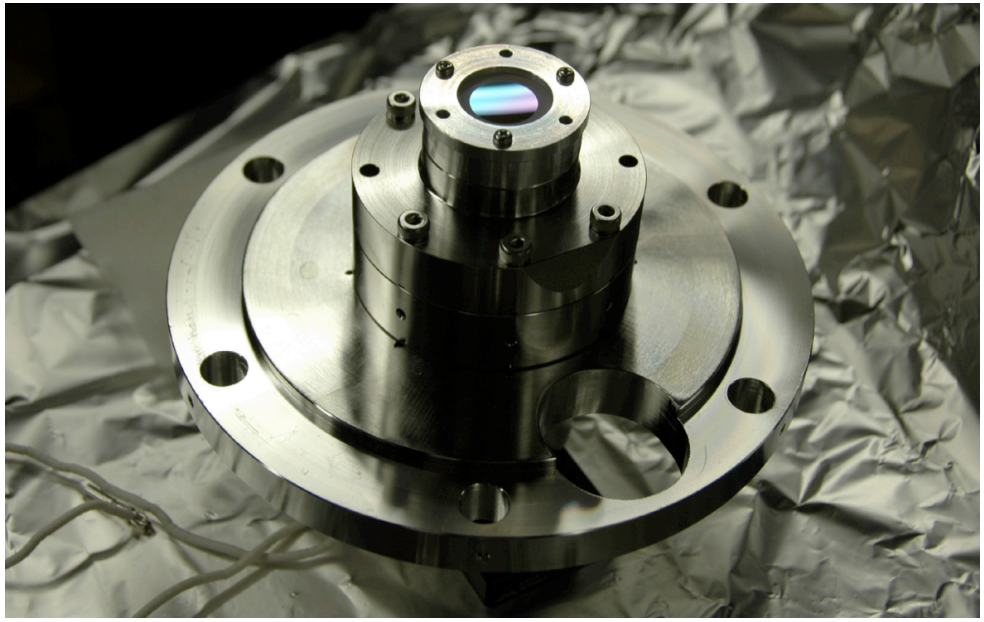

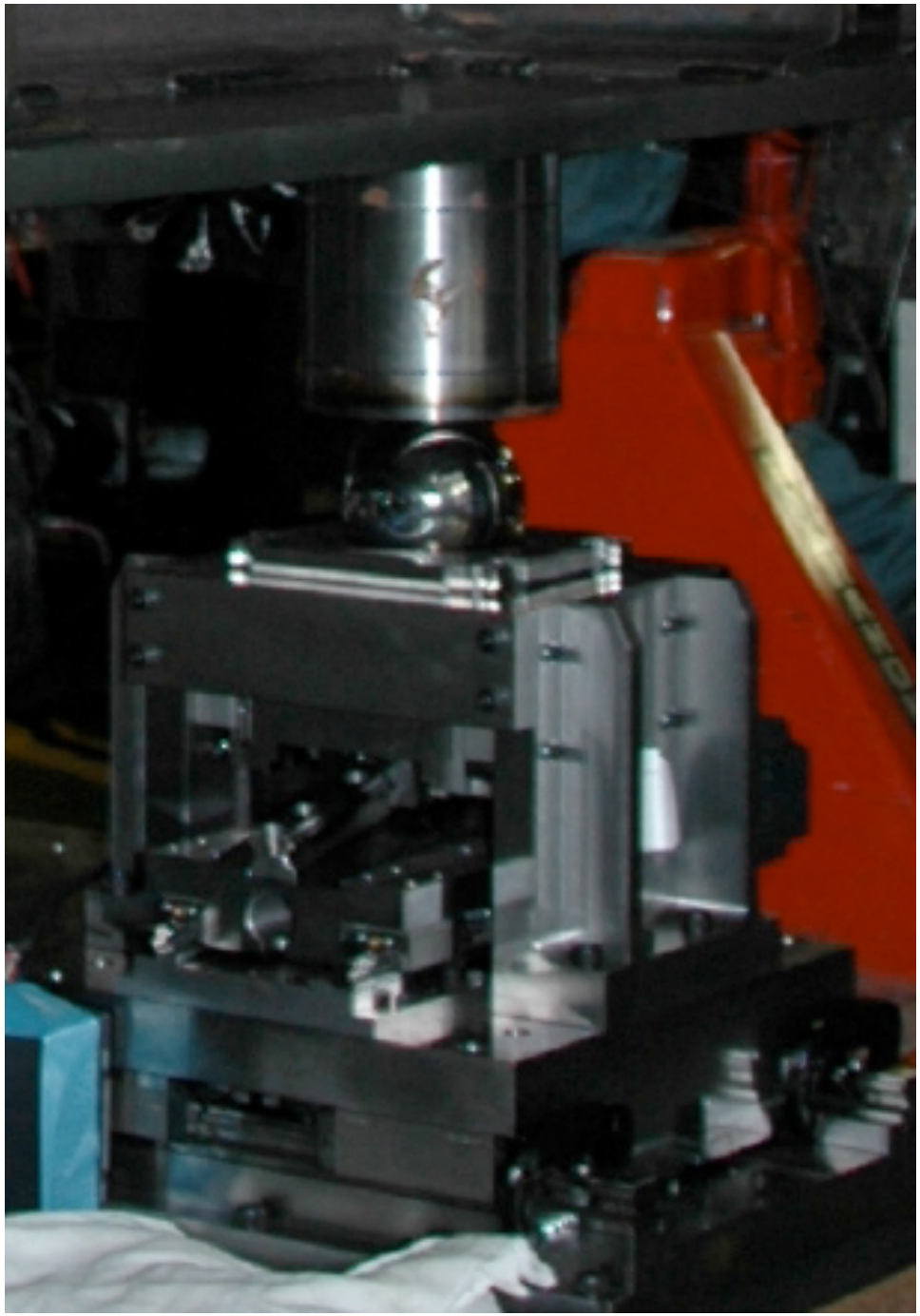

This Summer: Install prototype cavity into ATF-DR

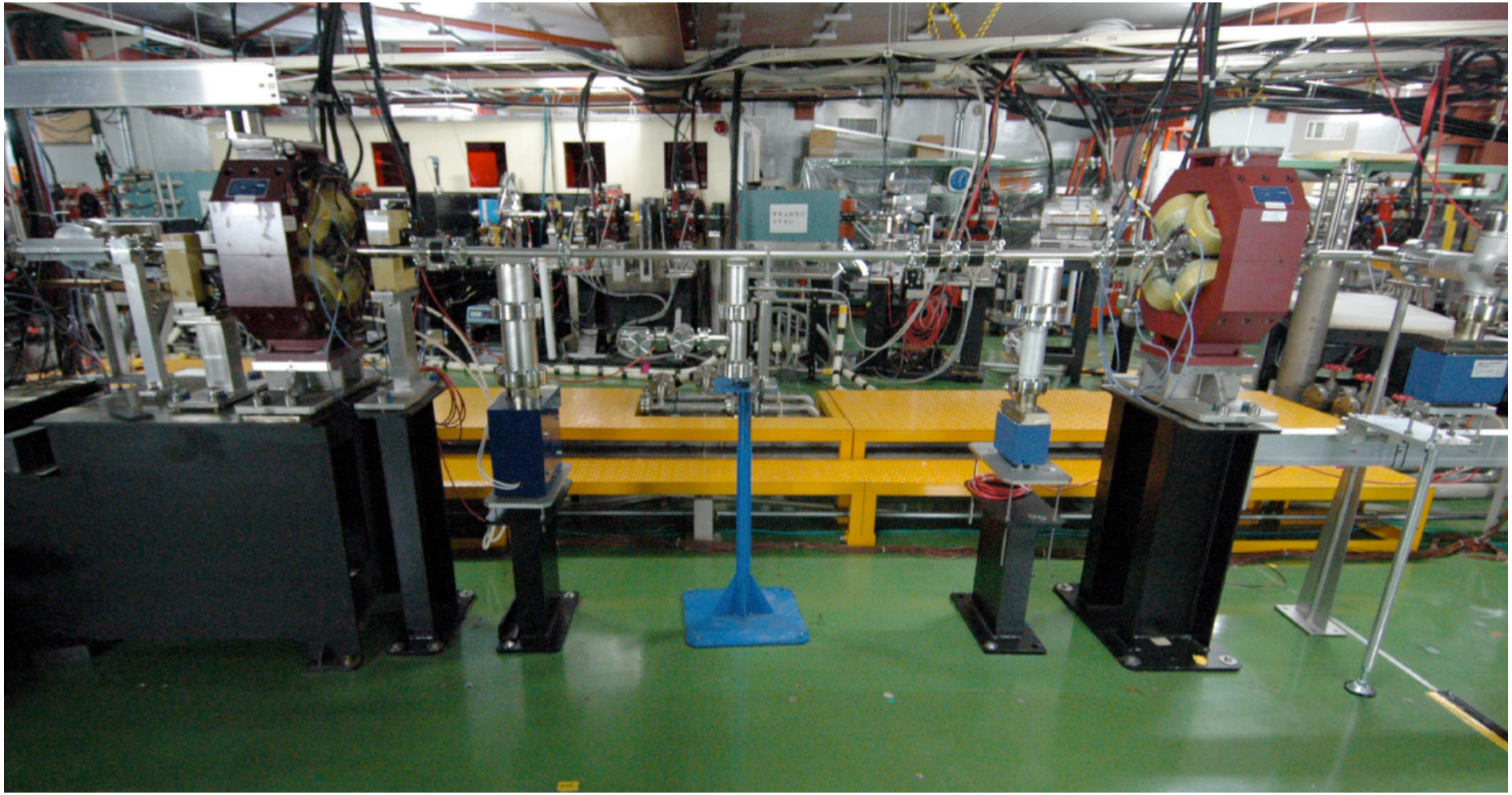

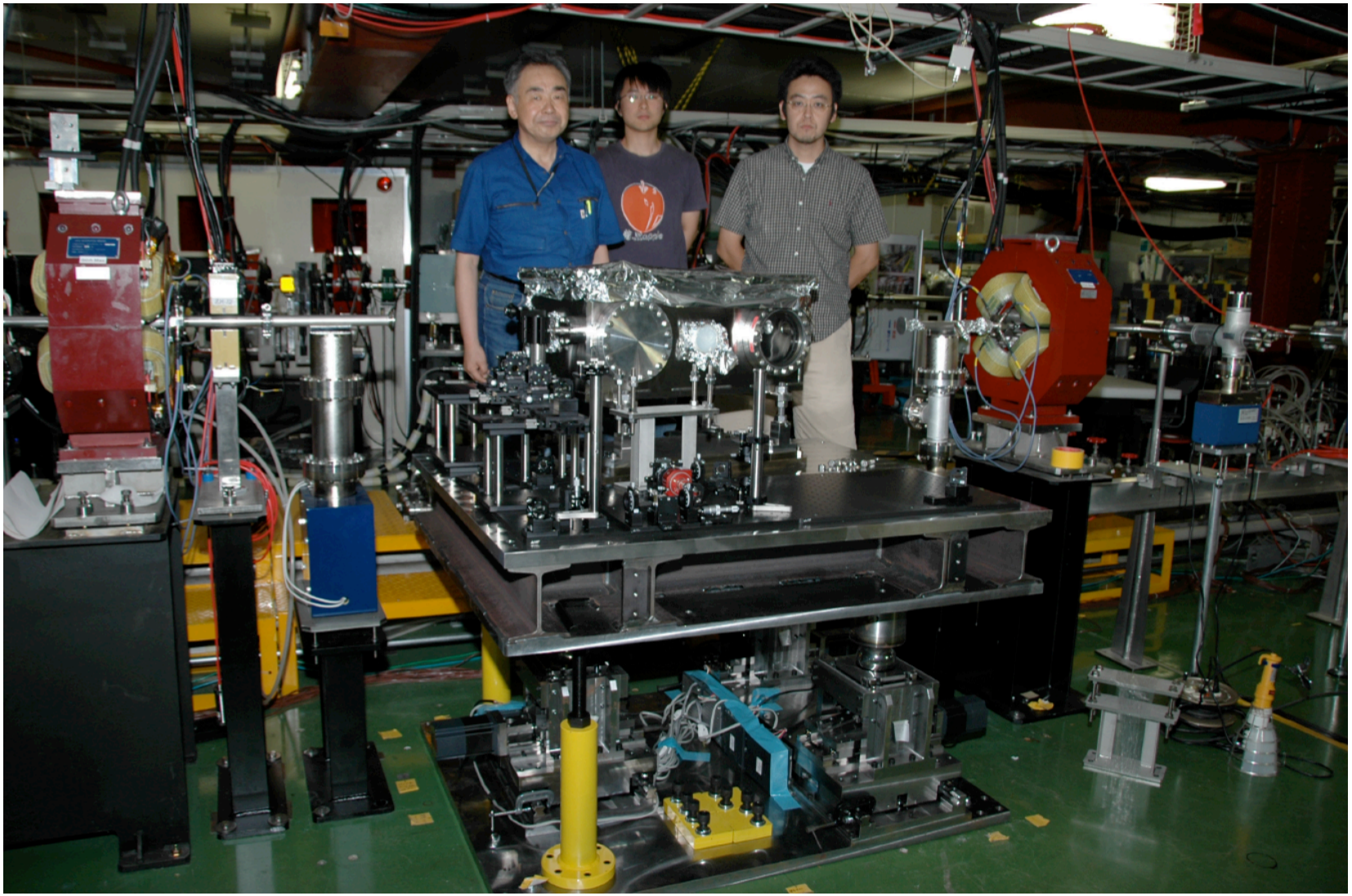

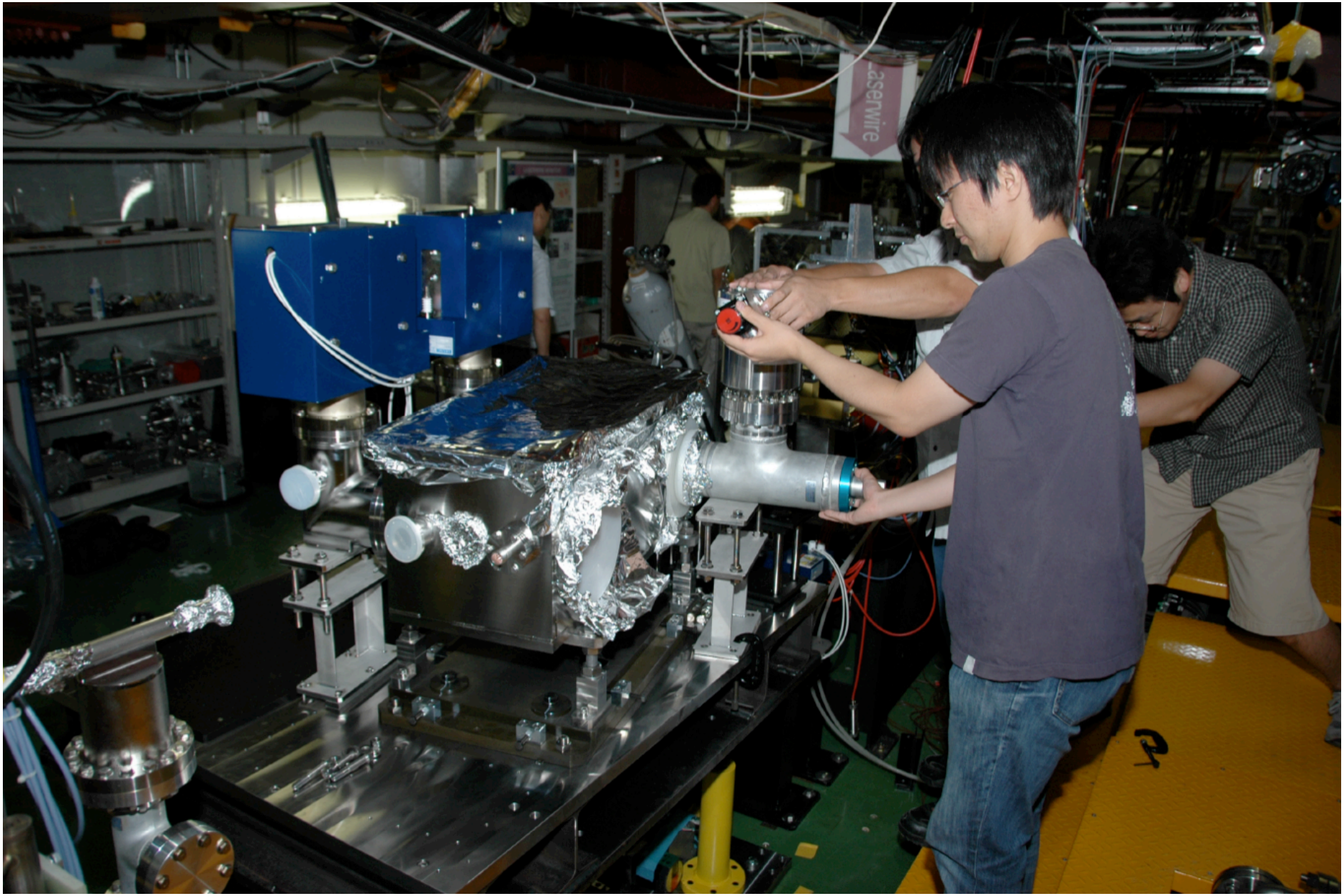
Laserwire

Expected Number of γ-rays

Number of γ-rays/bunch

Electron :Ne = $2x10^{10}$ (single bunch operation)
Laser : 10 W (28 nJ/bunch)
Optical Cavity: Enhancement = 1000

Nγ =1300/bunch X-ing angle = 10 deg
Nγ = 900/bunch X-ing angle = 15 deg

Number of γ-rays/second

Electron :Ne =$1x10^{10}$ (multi-bunch and multi-train operation)
Electron 20 bunches/train, 3 trains/ring
Laser : 10 W (28 nJ/bunch)
Optical Cavity: Enhancement = 1000

Nγ = $8.5x10^{10}$/sec X-ing angle = 10 deg
Nγ = $5.7x10^{10}$/sec X-ing angle = 15 deg

R/D in France

Very High Enhancement ~ 20000 - 100000

Small spot size ~ 5 micron

Sofisticated cavity stucture with 4 mirrors

Start with no e^- beam

Later we will make a e^- beam compatible cavity

Non planer cavity with 4 mirrors in LAL

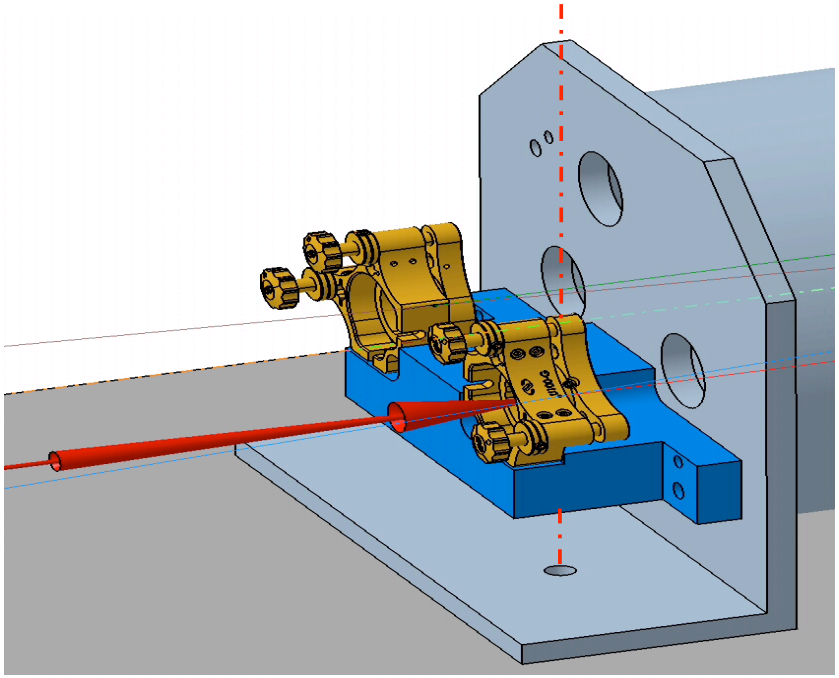

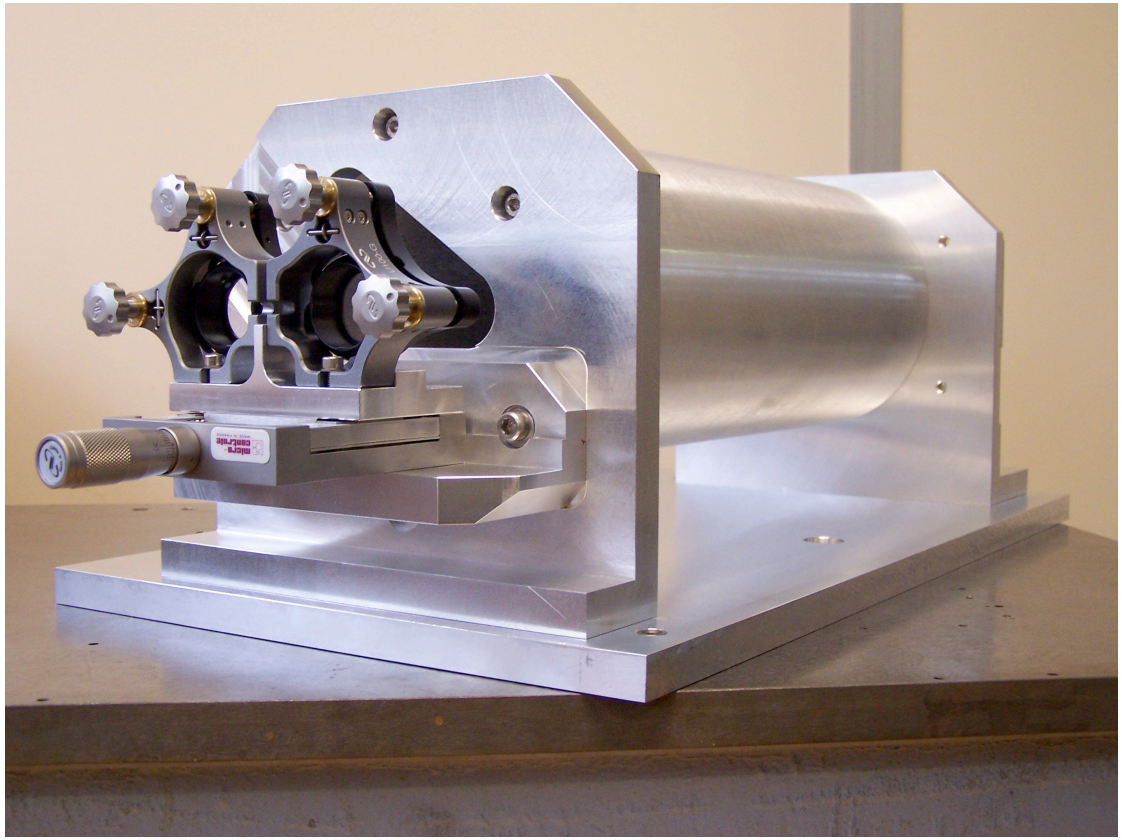

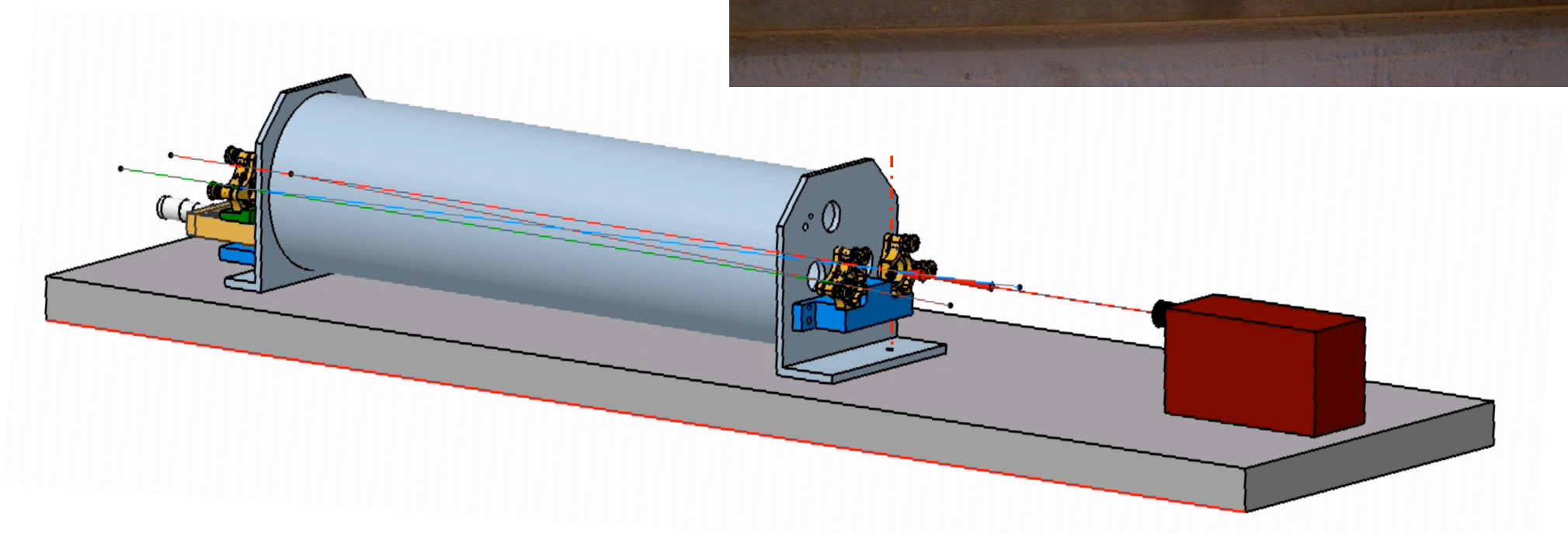

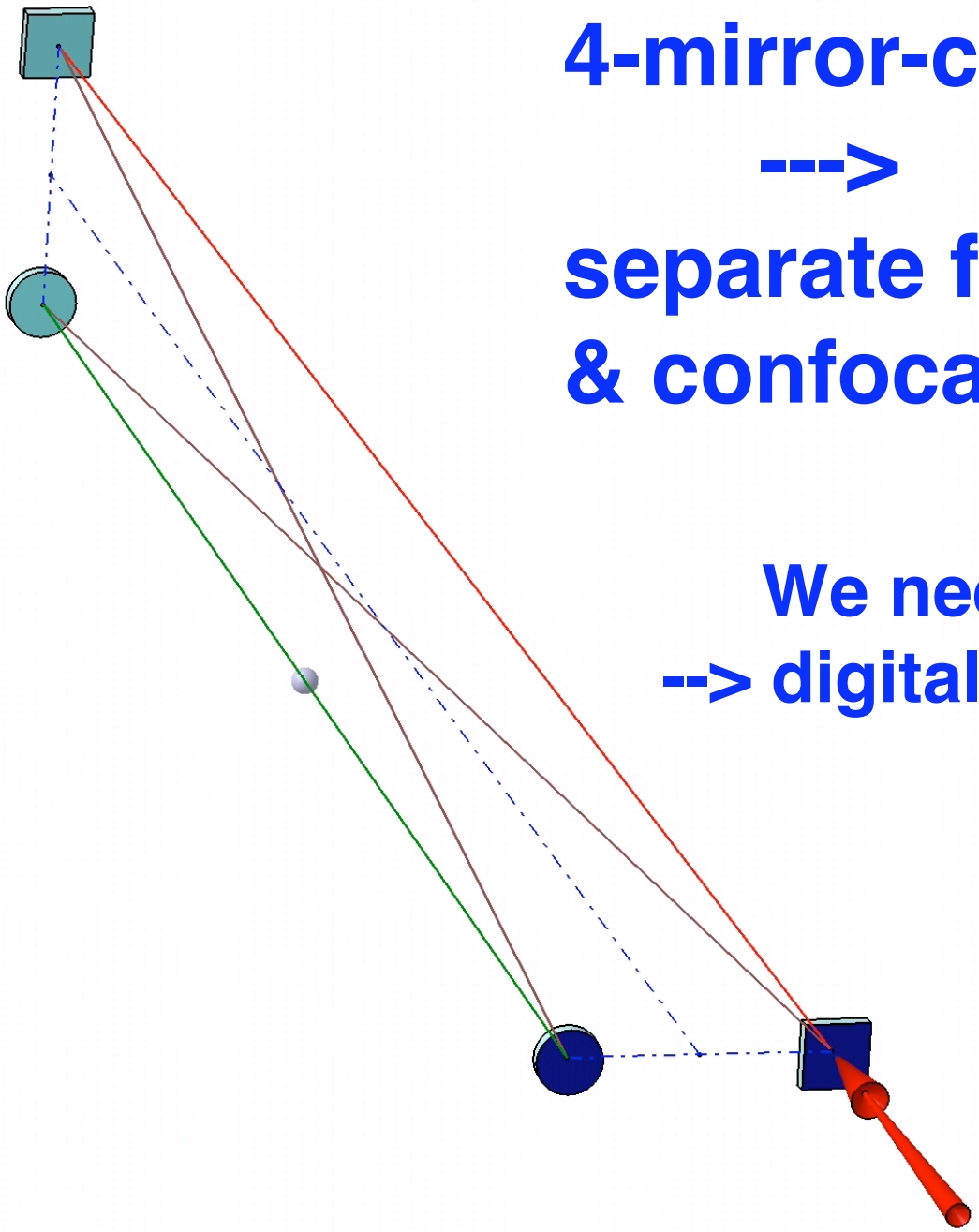

4-mirror-cavity

--->

separate functions
& confocal configuration

We need complicated control.
--> digital feedback

2-mirror cavity

R1=R2=L/2

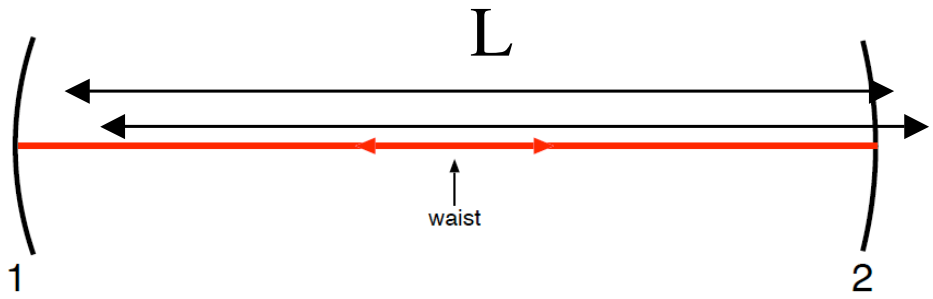

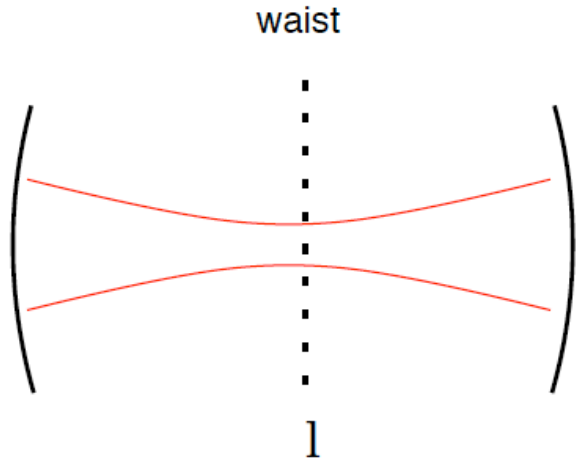

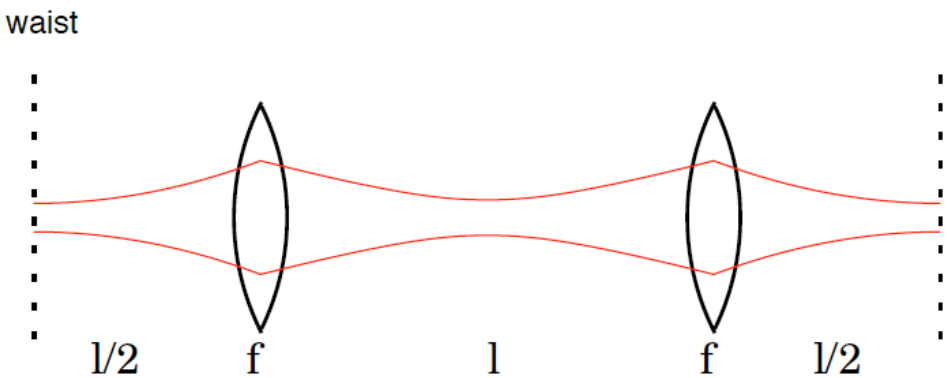

concentric

4-mirror cavity

R1=R2=L

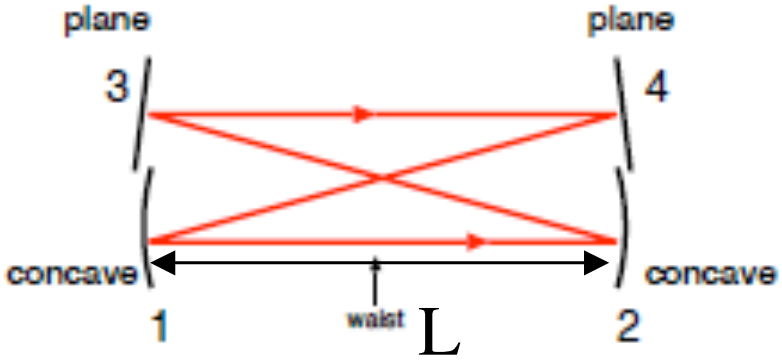

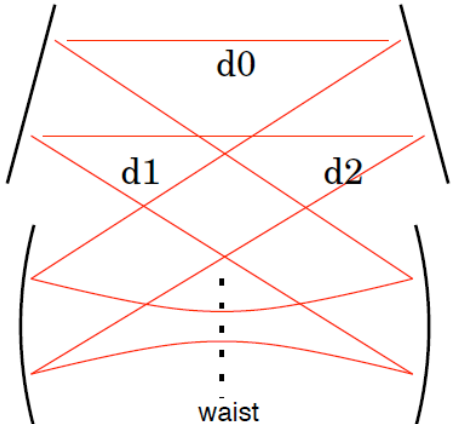

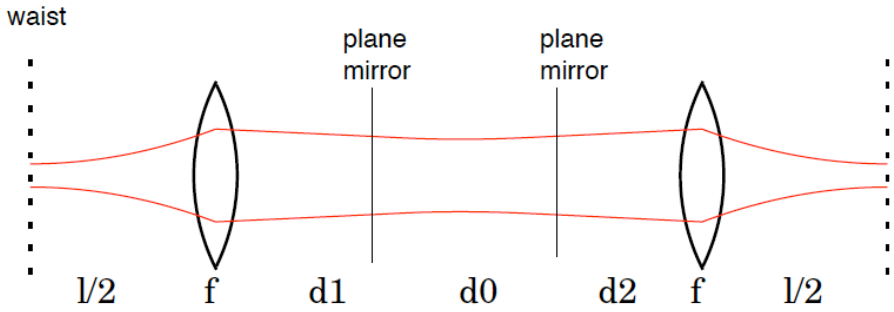

confocal

Study of digital feedback in a two-mirror cavity

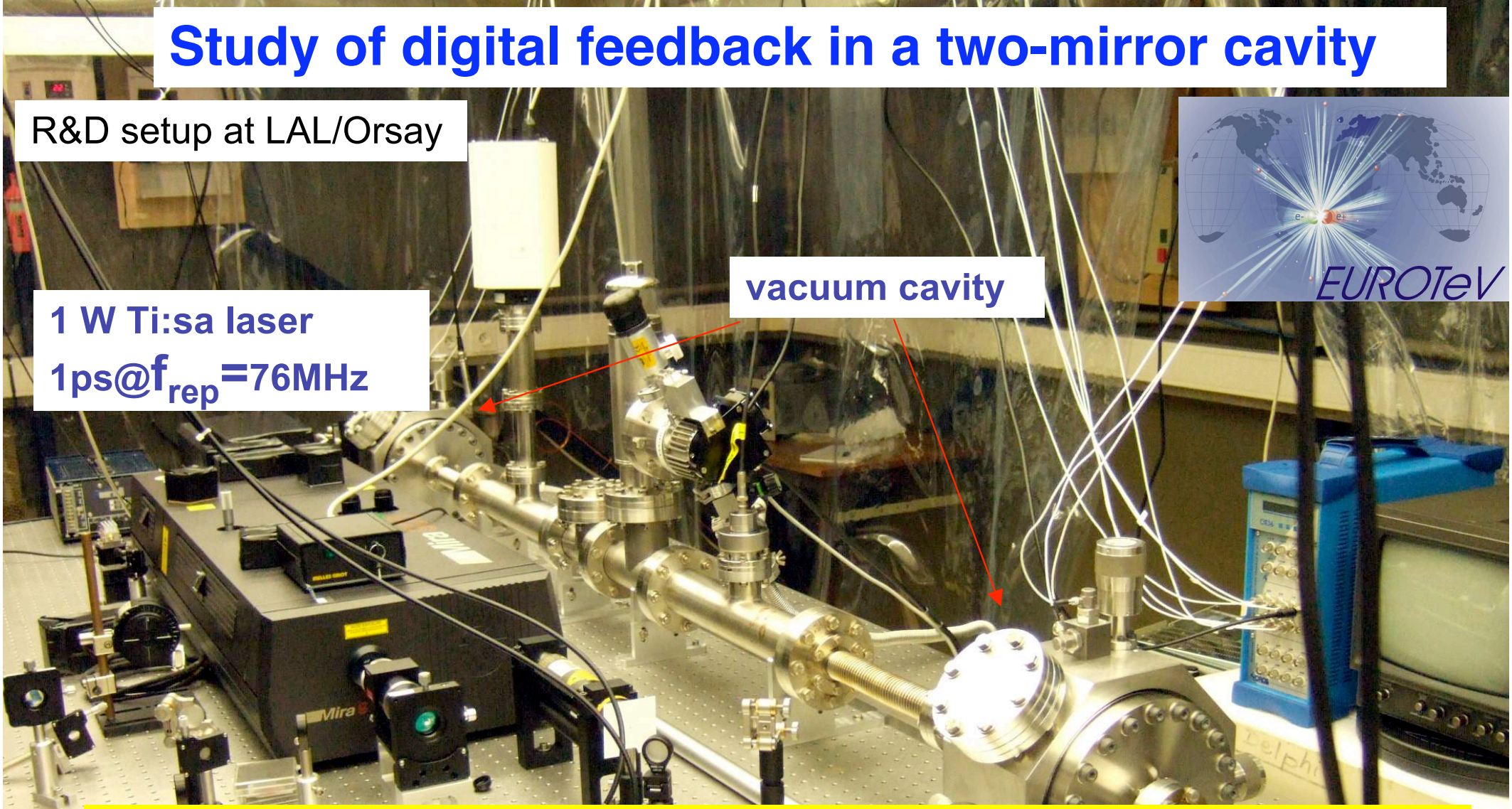

Status : Cavity locked (low gain ~1200)

- **Digital feedback (VHDL programming) set up**
- **Already $\Delta f_{rep}/f_{rep}=10^{-10}$ ➔ Δf_{rep}=30mHz for frep=76MHz**
- **New mirrors in septembre --> gains 10^4-10^5**

Study of 4-mirror cavity is on going at LAL

cavity is not conpatible wth e-beam

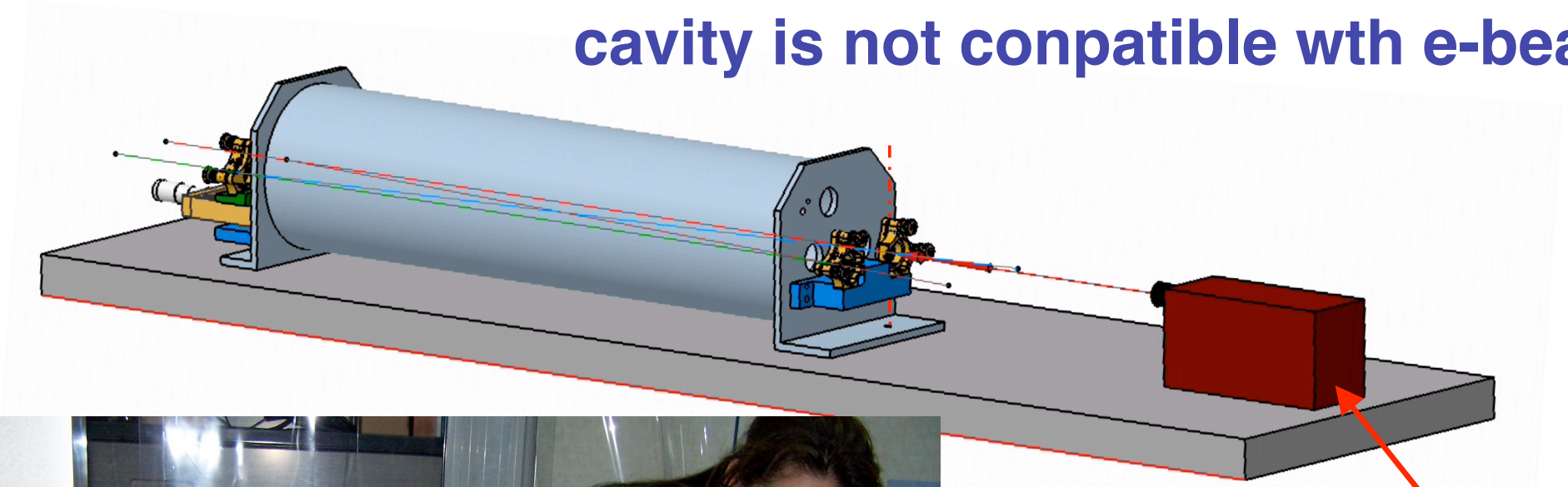

Cw laser diode in extended cavity config (Littrow configuration)

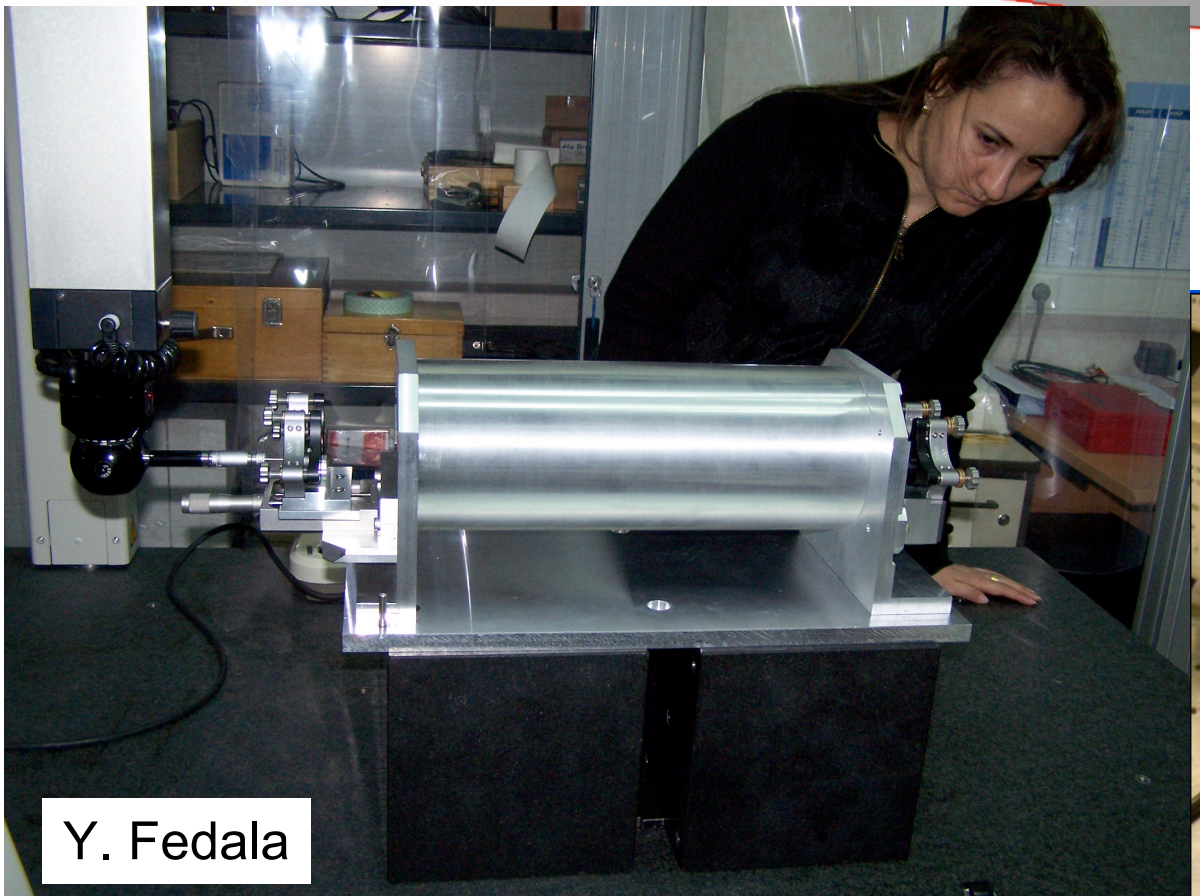

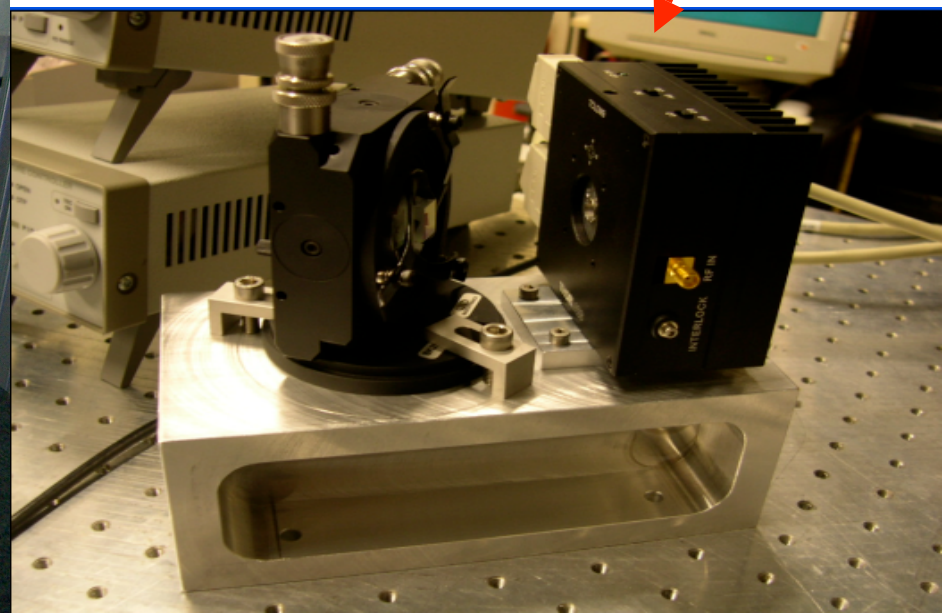

R/D in France and in Asia are Complementary

R/D in France

Very High Enhancement ~ 20000 - 100000

R/D in Japan/China

Moderate Enhancement ~ 1000

R/D in France and in Asia are Complementary

R/D in France

Very High Enhancement ~ 20000 - 100000

Small spot size ~ 5 micron

R/D in Japan/China

Moderate Enhancement ~ 1000

Moderate spot size ~ 30 micron

R/D in France and in Asia are Complementary

R/D in France

Very High Enhancement ~ 20000 - 100000

Small spot size ~ 5 micron

Sofisticated cavity stucture with 4 mirrors

R/D in Japan/China

Moderate Enhancement ~ 1000

Moderate spot size ~ 30 micron

Simple cavity stucture with two mirrors

R/D in France and in Asia are Complementary

R/D in France

Very High Enhancement ~ 20000 - 100000

Small spot size ~ 5 micron

Sofisticated cavity stucture with 4 mirrors

Digital feedback

R/D in Japan/China

Moderate Enhancement ~ 1000

Moderate spot size ~ 30 micron

Simple cavity stucture with two mirrors

Analog feedback

R/D in France and in Asia are Complementary

R/D in France

Very High Enhancement ~ 20000 - 100000

Small spot size ~ 5 micron

Sofisticated cavity stucture with 4 mirrors

Digital feedback

Start with no e^- beam

R/D in Japan/China

Moderate Enhancement ~ 1000

Moderate spot size ~ 30 micron

Simple cavity stucture with two mirrors

Analog feedback

Get experinence with e^- beam

R/D in France and in Asia are Complementary

R/D in France

Very High Enhancement ~ 20000 - 100000

Small spot size ~ 5 micron

Sofisticated cavity stucture with 4 mirrors

Digital feedback

Start with no e^- beam

Later we will make a e- beam compatible cavity

R/D in Japan/China

Moderate Enhancement ~ 1000

Moderate spot size ~ 30 micron

Simple cavity stucture with two mirrors

Analog feedback

Get experinence with e^- beam

Design study of e-beam conpatible 4-mirror cavity

cavity will be installed in ATF in 2008 - 2009

4 miroirs cavité

178.5 MHz

Angle laser / beam 8°

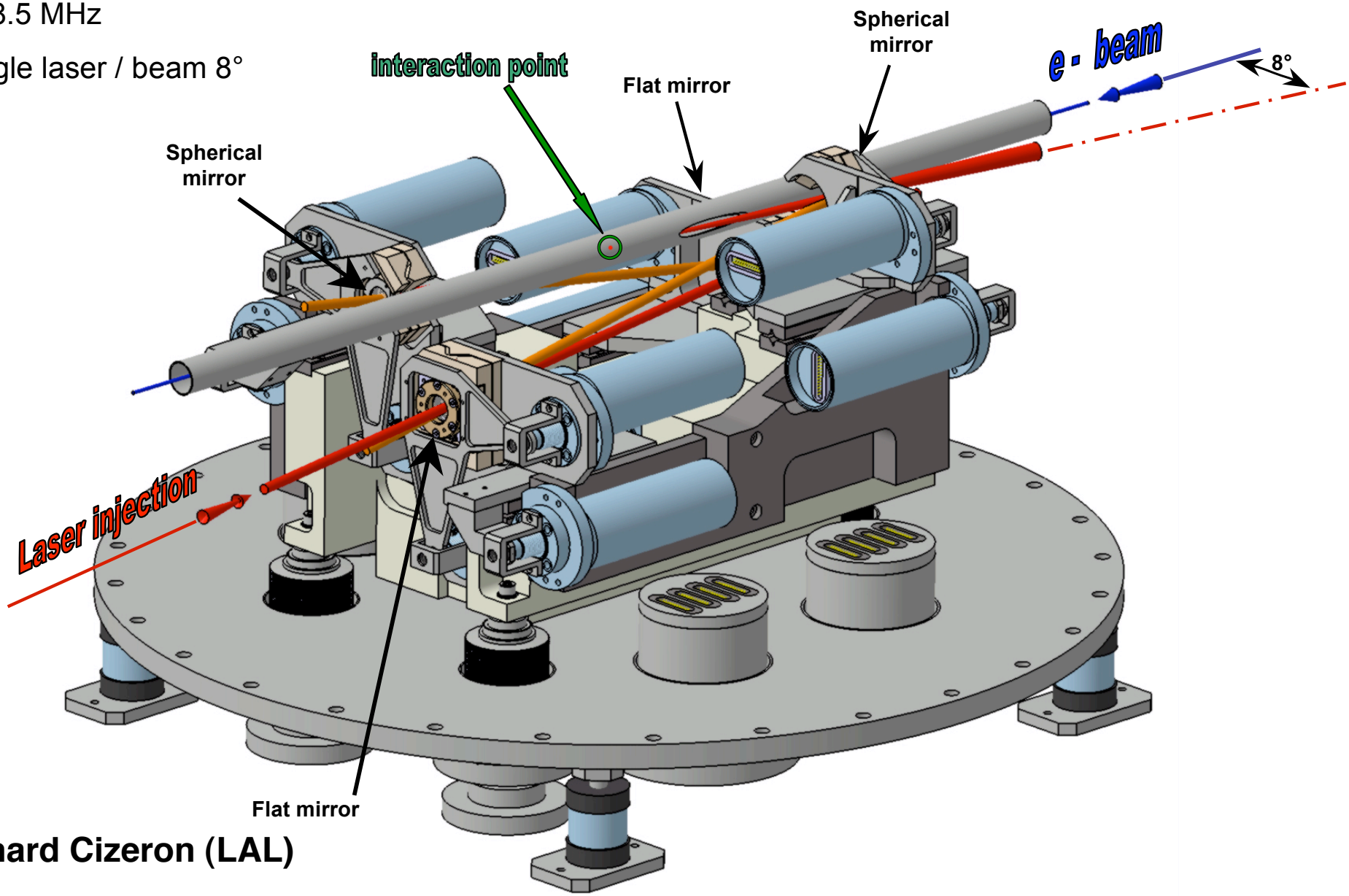

Richard Cizeron (LAL)

The 4-mirror cavity will be in ATF

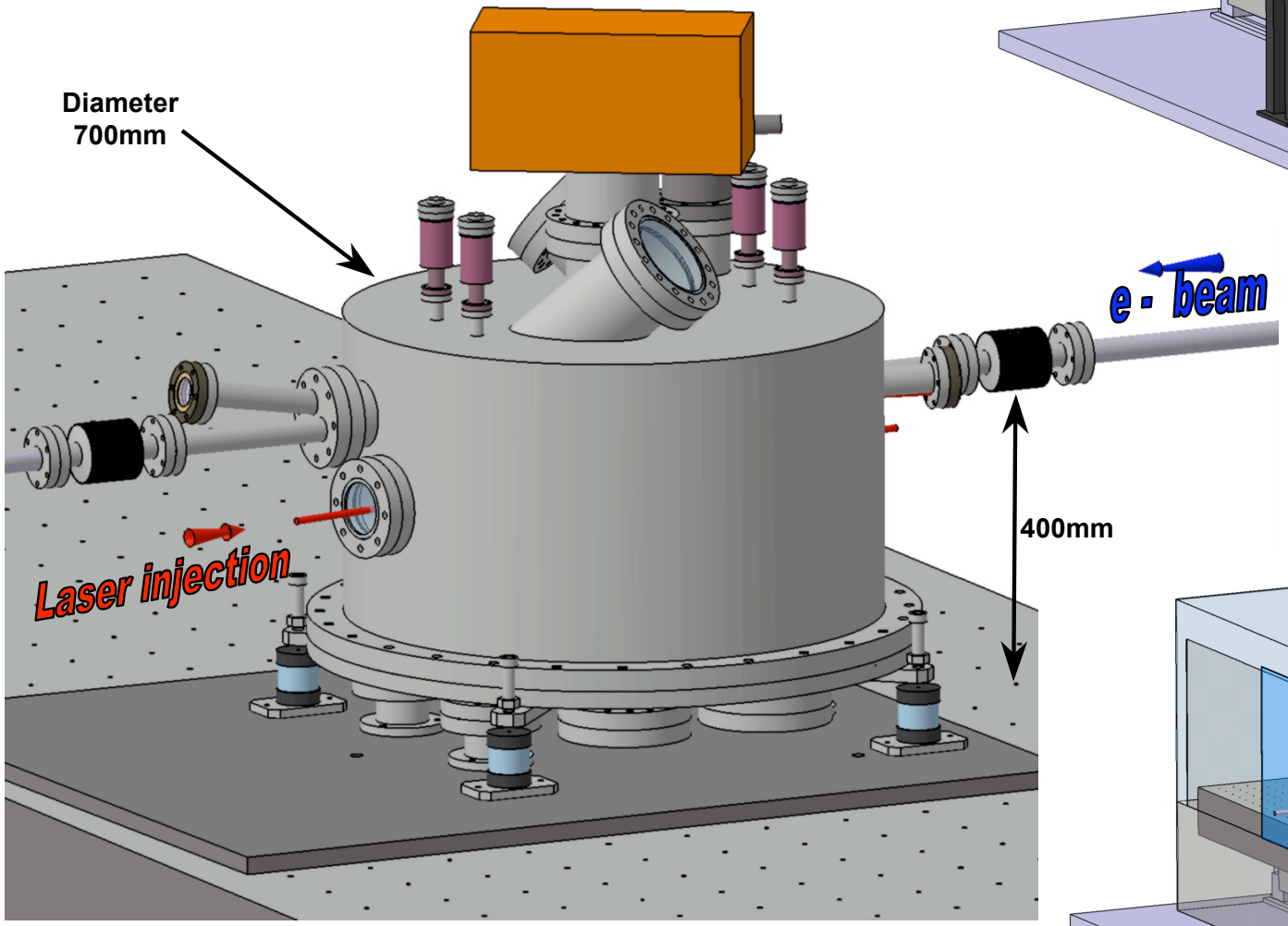

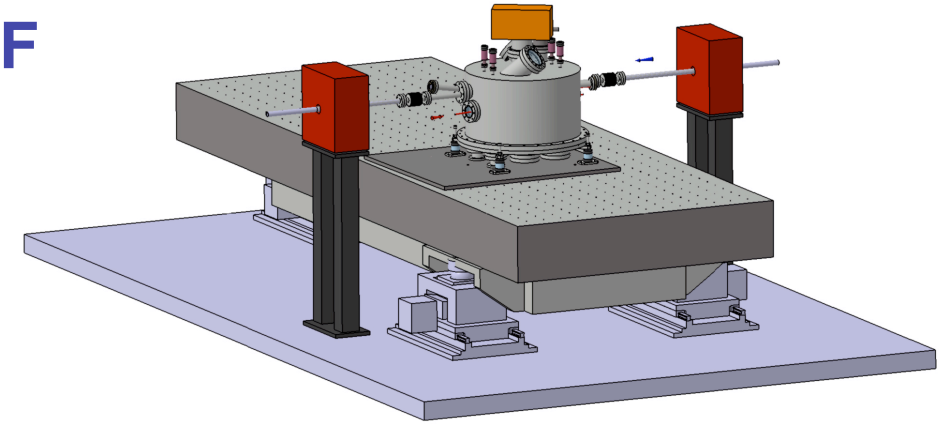

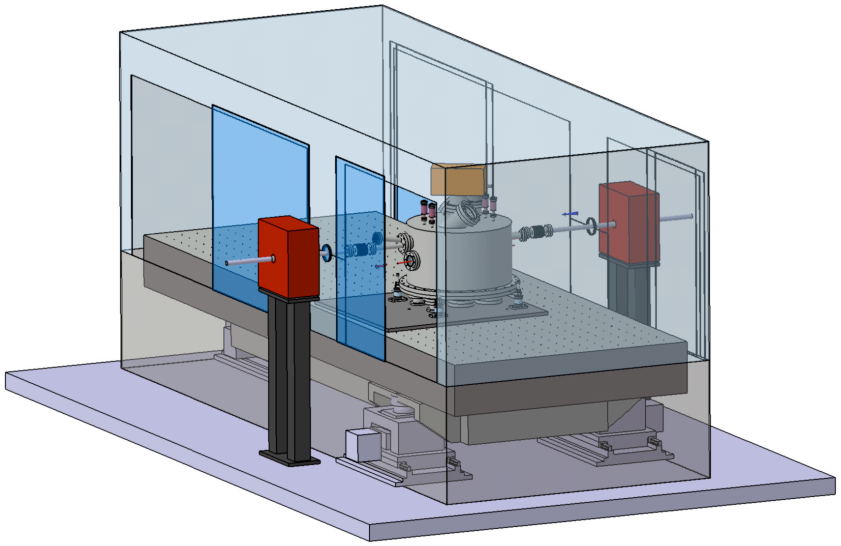

Richard Cizeron (LAL)

The 4-mirror cavity will be in ATF

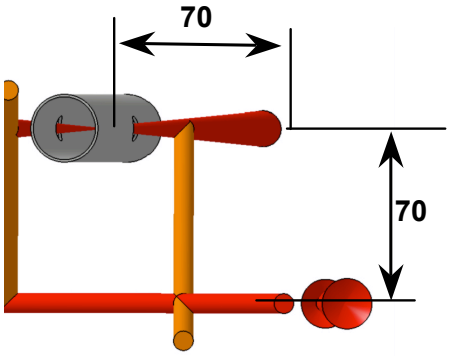

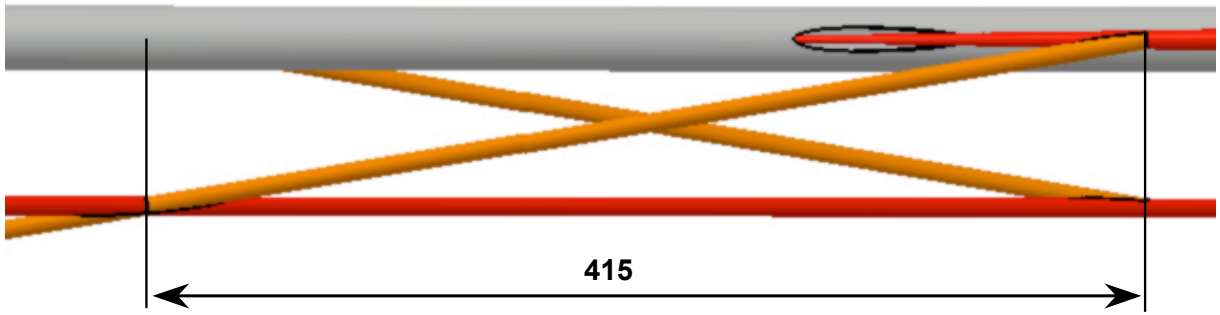

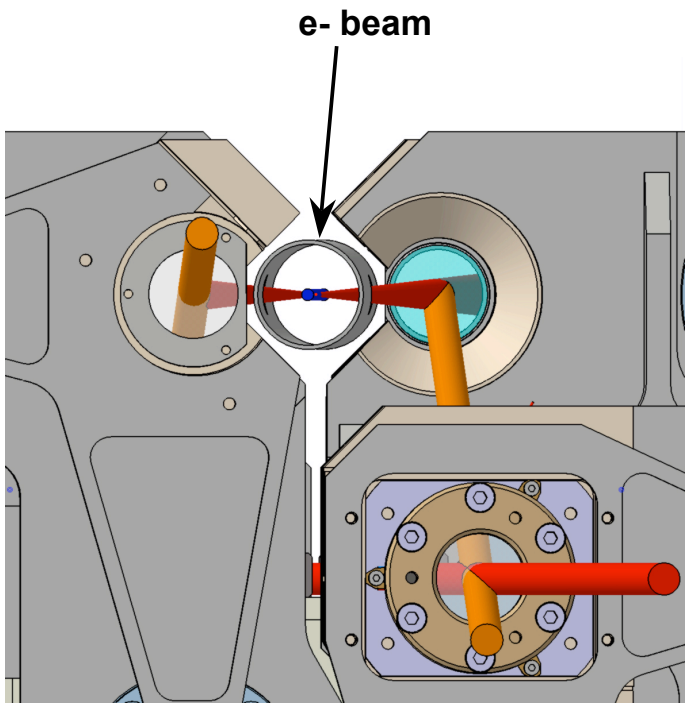

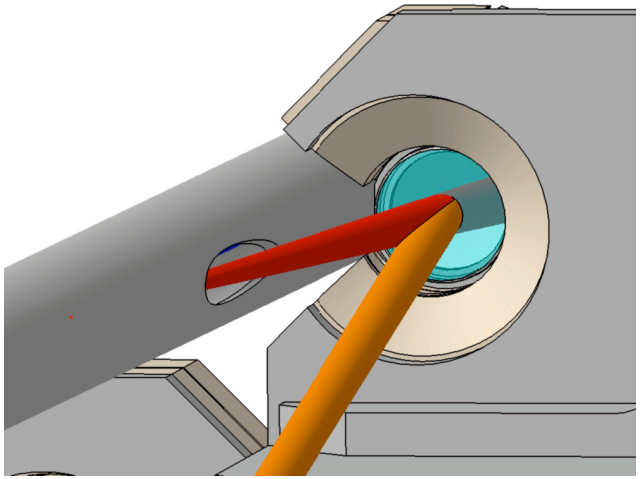

Cavité 178.5 MHz

Angle laser / beam 8°

Richard Cizeron (LAL)

R/D in France and in Asia are Complementary

R/D in France

Very High Enhancement ~ 20000 - 100000

Small spot size ~ 5 micron

Sofisticated cavity stucture with 4 mirrors

Digital feedback

Start with no e^- beam

Later we will make a e- beam compatible cavity

R/D in Japan/Asia

Moderate Enhancement ~ 1000

Moderate spot size ~ 30 micron

Simple cavity stucture with two mirrors

Analog feedback

Get experinence with e^- beam

World-wide PosiPol Collaboration

Collaborating Institutes:
BINP, CERN, DESY, Hiroshima, IHEP, IPN, KEK, Kyoto, LAL, NIRS, NSC-KIPT, SHI, Waseda, BNL, JAEA and ANL

Sakae Araki, Yasuo Higashi, Yousuke Honda, Masao Kuriki, Toshiyuki Okugi, Tsunehiko Omori, Takashi Taniguchi, Nobuhiro Terunuma, Junji Urakawa, Yoshimasa Kurihara, Takuya Kamitani, X. Artru, M. Chevallier, V. Strakhovenko, Eugene Bulyak, Peter Gladkikh, Klaus Meonig, Robert Chehab, Alessandro Variola, Fabian Zomer, Alessandro Vivoli, Richard Cizeron, Frank Zimmermann, Kazuyuki Sakaue, Tachishige Hirose, Masakazu Washio, Noboru Sasao, Hirokazu Yokoyama, Masafumi Fukuda, Koichiro Hirano, Mikio Takano, Tohru Takahashi, Hirotaka Shimizu, Shuhei Miyoshi, Akira Tsunemi, Ryoichi Hajima, Li XaioPing, Pei Guoxi, Jie Gao, V. Yakinenko, Igo Pogorelsky, Wai Gai, and Wanming Liu

POSIPOL 2006
CERN April 2006

http://posipol2006.web.cern.ch/Posipol2006/

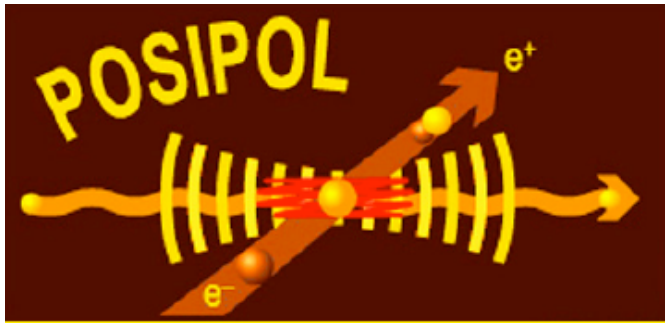

POSIPOL 2007
LAL-Orsay, France
23-25 May

http://events.lal.in2p3.fr/conferences/Posipol07/

World-Wide-Web of Laser Compton

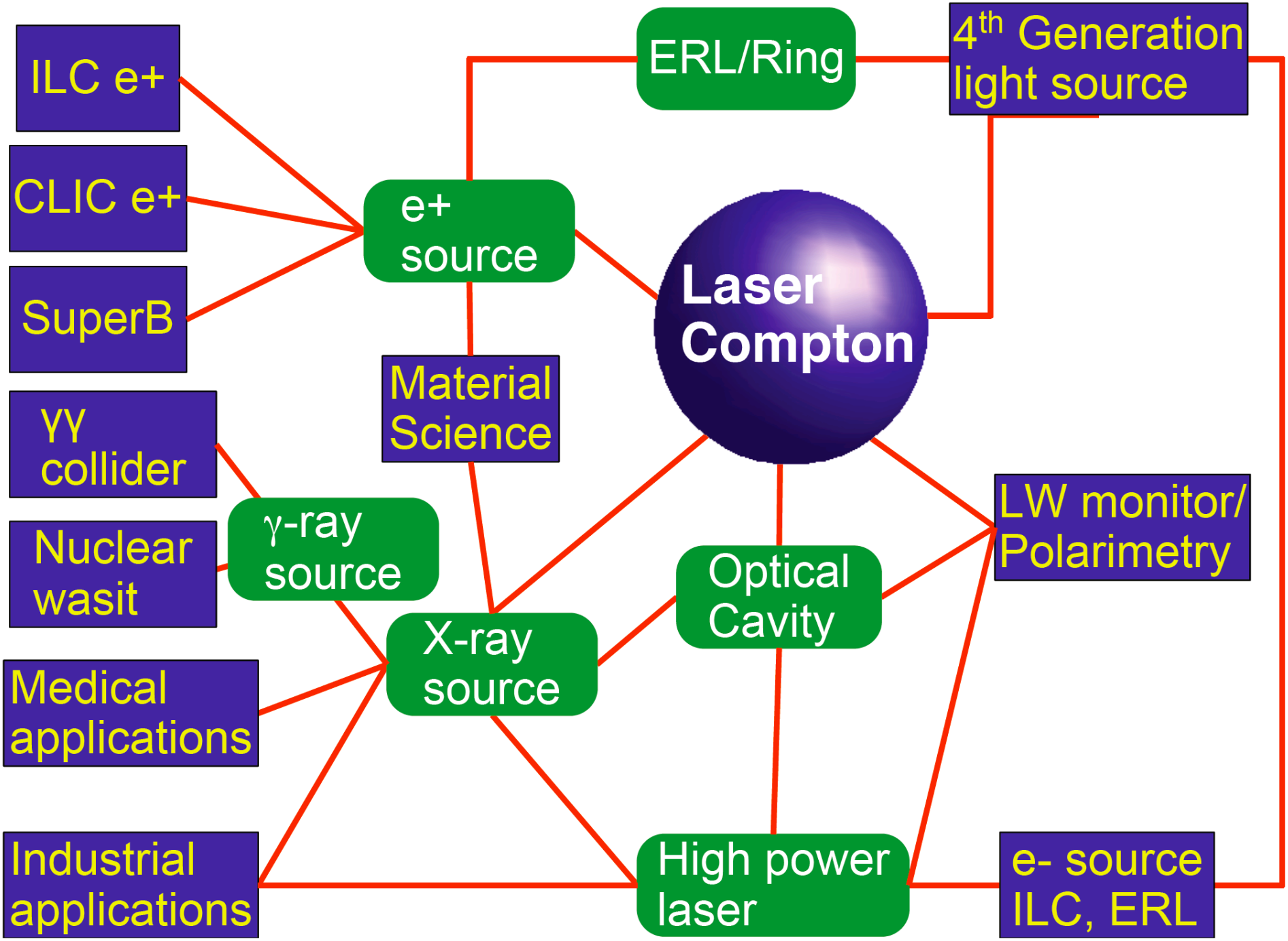

Summary

1. Compton e^+ source is an advanced alternative of ILC e^+ source
2. Laser stacking cavity is a key.
3. In Asia, we are preparing γ-ray generation by installing the stacking cavity in ATF-DR.
4. In France, we are developing a very advanced cavity with 4 mirrors. In future, a 4-mirror cavity will be installed in ATF-DR for γ-ray generation.
5. We have a world-wide collaboration for Compton. Not only for ILC e^+ source.
   Also for many other applications.

Extra Slides

R&D at LAL : toward small laser spot size

Small laser spot size &2 mirrors cavity ➔ unstable resonator (concentric resonator)

Stable solution: 4 mirror cavity as in Femto lasers

BUT➔ astigmatic & linearly polarised eigen-modes

Non-planar 4 mirrors cavity
➔Astigmatism reduced &
~circularly polarised eigenmodes

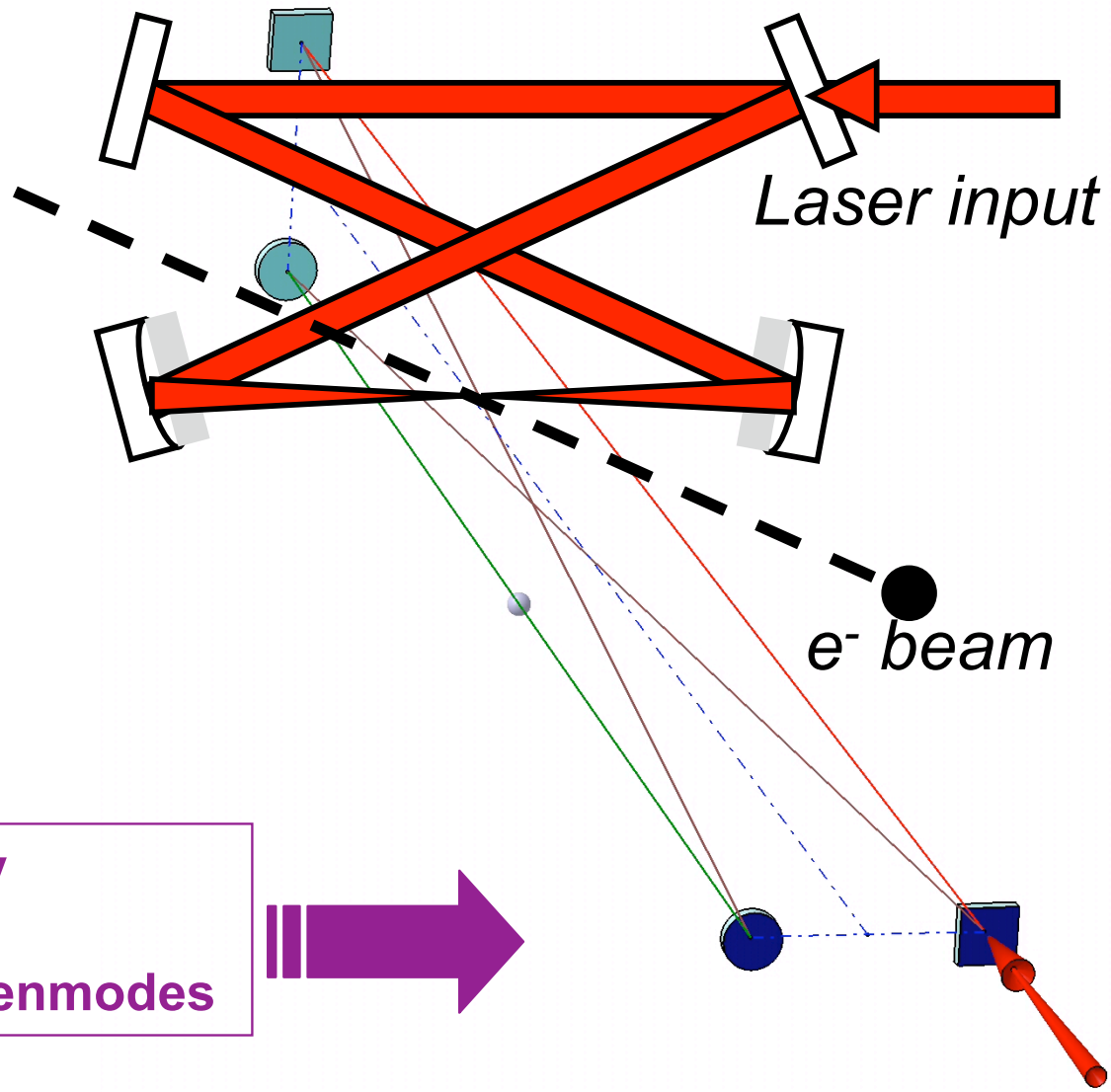

Cavity History in Japan by H. Sato (Posipol 2006)

	What we want ILC YAG case (Snowmass 2005)	Now on Going at KEK-ATF	Achieved in 2004 (Takezawa(Kyoto U) et al) at KEK-ATF
Electron Energy (GeV)	1.3	1.3	1.3
Ne/bunch	6.2E10	2.0E10	1.0E10
Electron repetition rate (MHz)	325	357	357
Hor. Beam size (rms,us)	25	79	79
Ver. Beam size (rms,us)	5	6	6
Bunch length (rms,mm)	5	9	9
Laser type (wavelength)	YAG(1064nm)	YAG(1064nm)	YAG(1064nm)
Laser frequency (MHz)	325	357	357
Laser radius (rms, um)	5	29	125
Laser pulse width (rms,mm)	0.9	0.9	0.9
Laser pulse power /cavity	750μJ x 1000	28nJ(10W) x 1000	1nJ(0.3W) x 65
Number of laser cavities	30	1	1
Crossing angle (degree)	8	12	90

e^- beam optics

DR North Straight Section

by T. Okugi

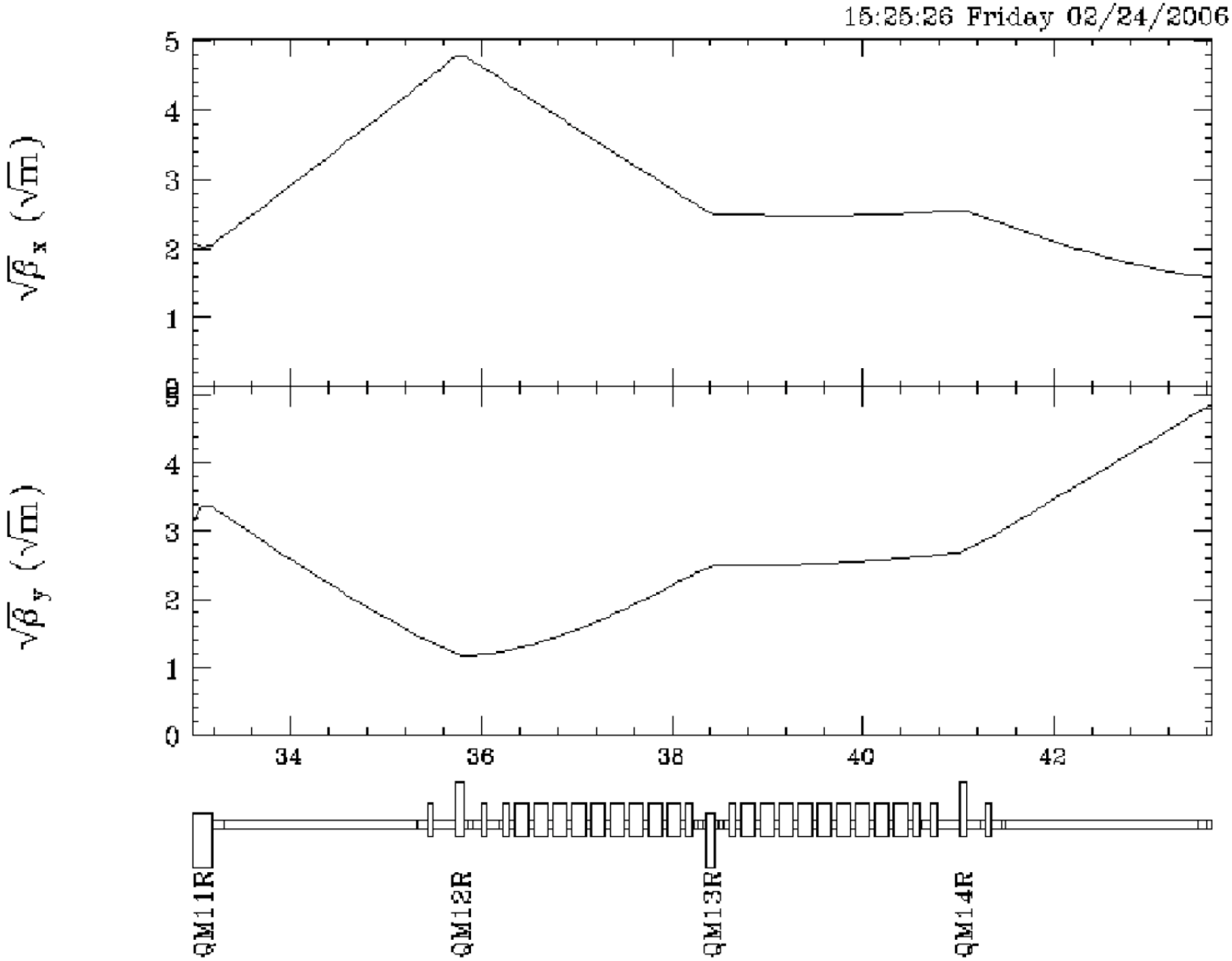

e^- beam optics and spot size

```
s = 40 m (=s0)  (between QM13R and QM14R)

    Twiss Parameter
          alpha_x = -0.092 m
          beta_x  =  6.155 m
          eta_x   =  0     m

          alpha_y = -0.232 m
          beta_y  =  6.546 m
          eta_y   =  0     m

    Assume
          eps_x   = 1.0E-09 m
          eps_y   = 0.5E-11 m

    e- beam spot size
          sig_x (s0) = 78 um
          sig_y (s0) =  6 um
            Stay almost constant in S = +- 1 m
```

Compton for "2 x 6 km DR": no simulation yet

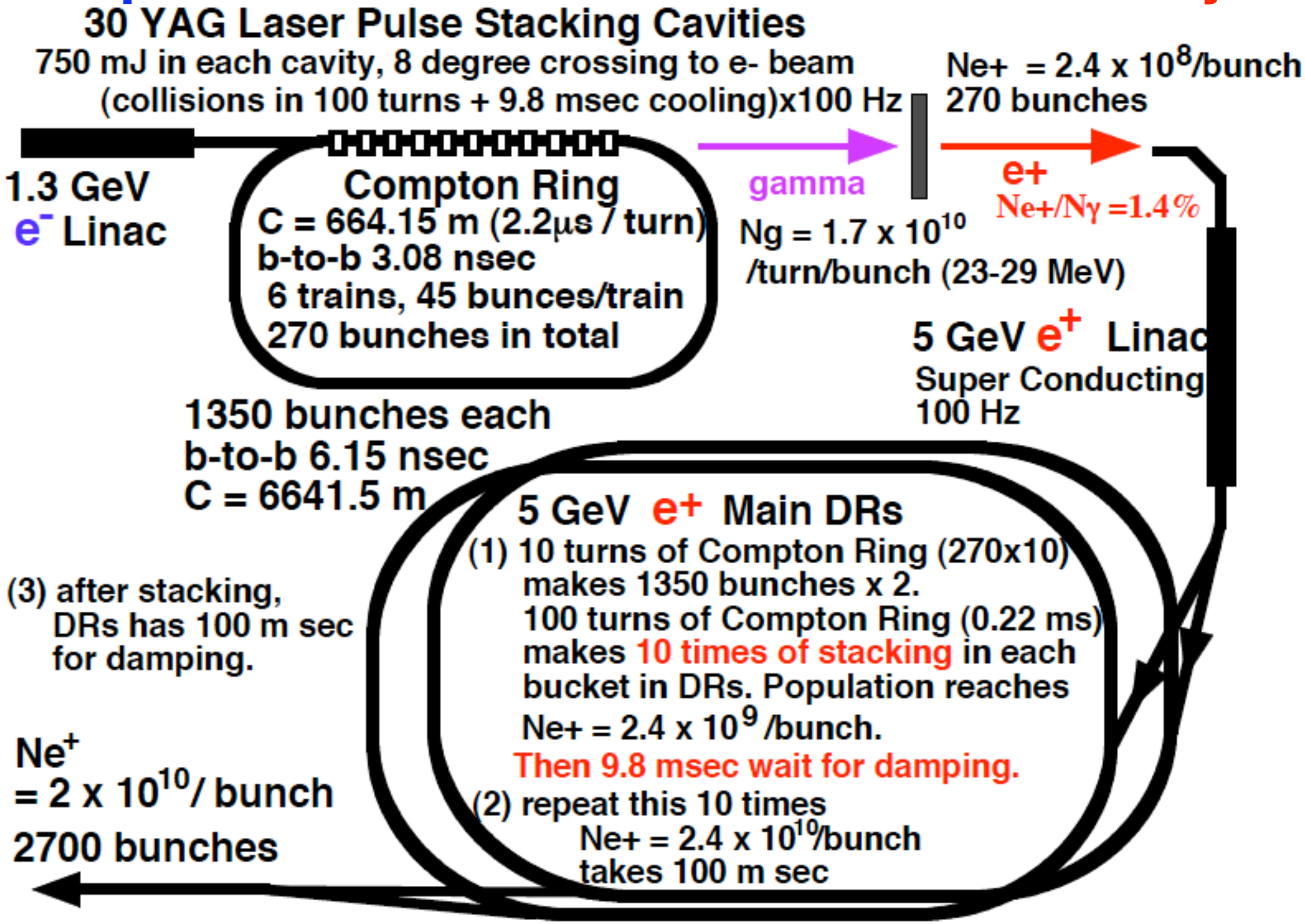

Collision Point

Collision point is at between QM13R and QM14R (s = 40 m)

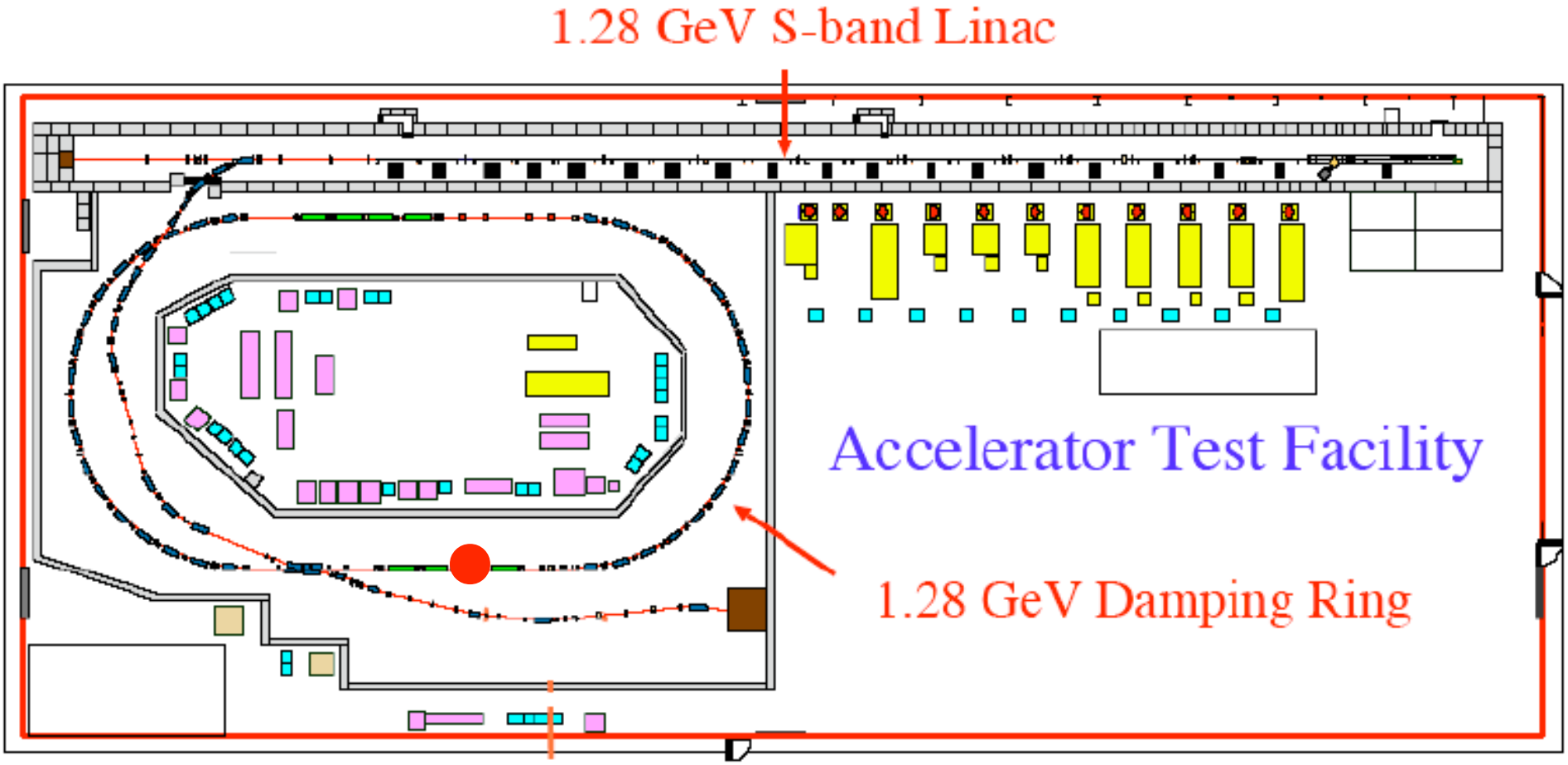
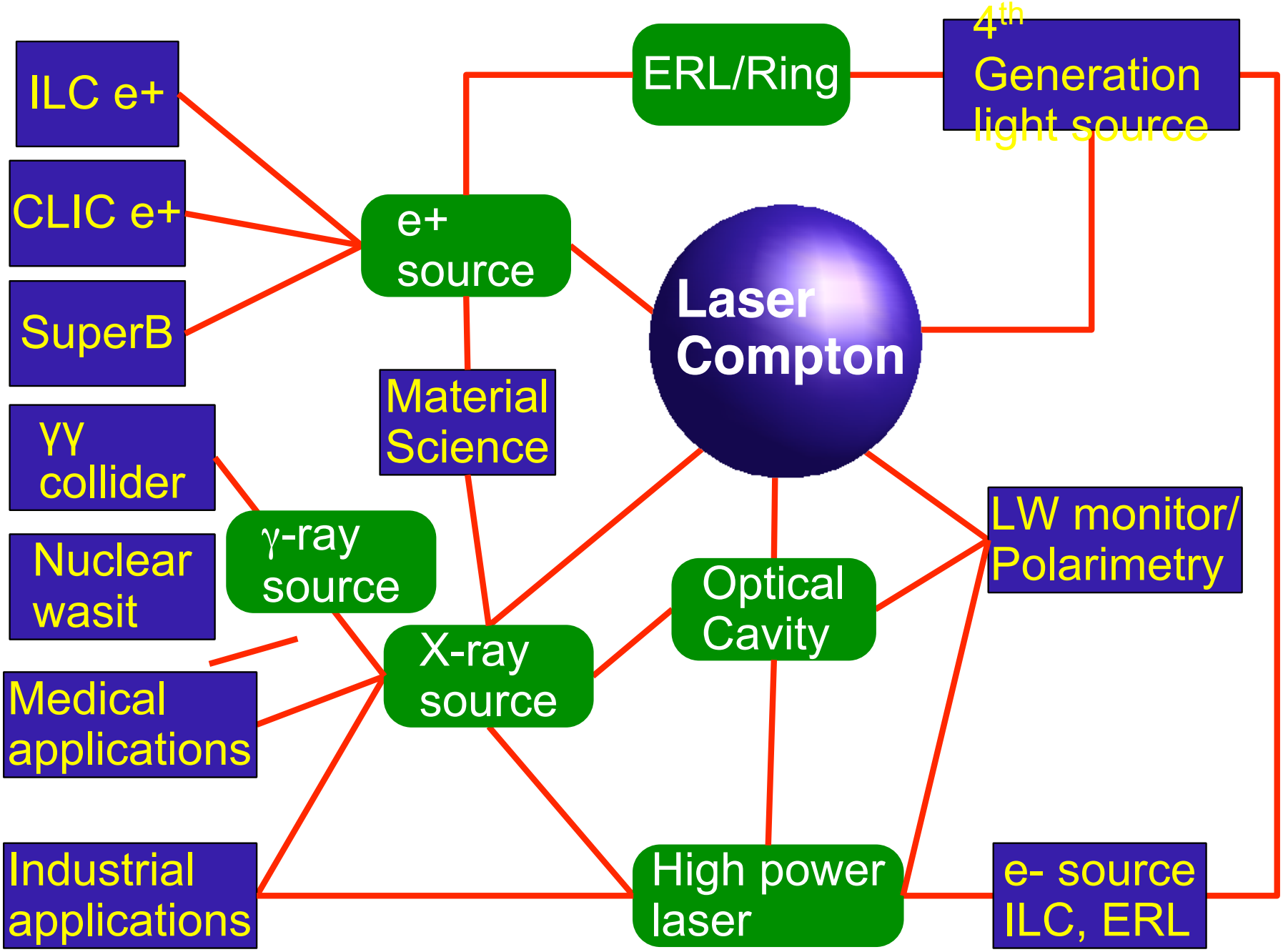
World-Wide-Web of Laser Compton